www.ebaraeurope.com

EBARA

EBARA PUMPS EUROPE S.p.A.
Via Pacinotti, 32
36040 BRENDOLA (VICENZA), Italy
Phone: +39-0444-706811
Fax: +39-0444-706950
Plants: Cles, Brendola
www.ebaraeurope.com

EBARA PUMPS EUROPE S.p.A. reserves the right to make modifications without prior notice: all specifications could be subject to change

cod. 479705353 REV 01/06

EBARA

NEW

EVM

Vertical Multistage Centrifugal Pumps

INDEX

SPECIFICATIONS pag. 4

APPLICATIONS pag. 5

TYPE KEY pag. 6

PERFORMANCE CHART pag. 7

PERFORMANCE TABLE pag. 8
EVM 3-5-10-18 pag. 8
EVM 32-45-64 pag. 9

TECHNICAL FEATURES pag. 10
Pump pag. 10
Motor pag. 10
Flanges pag. 11

PUMP AND MOTOR pag. 12

ELECTRICAL DATA pag. 13
Technical data EVM 3-18 pag. 13
Technical data EVM 32 pag. 14
Technical data EVM 45 pag. 14
Technical data EVM 64 pag. 15
Noise data pag. 15

EBARA TECHNOLOGY pag. 16

PERFORMANCE CURVES pag. 24
EVM 3 pag. 24
EVM 5 pag. 25
EVM 10 pag. 26
EVM 18 pag. 27
EVM 32 pag. 28
EVM 45 pag. 30
EVM 64 pag. 32

DIMENSIONS pag. 27
EVM 3-18 pag. 34
EVM 32-64 pag. 36

MECHANICAL SEAL pag. 38
Cartridge shaft seal pag. 39

CONSTRUCTIONS pag. 40
EVM 3-18 Pump without ball bearing pag. 40
EVM 3-18 Pump with single ball bearing pag. 41
EVM 32 Pump without ball bearing pag. 43
EVM 32 Pump with single ball bearing pag. 44
EVM 45-64 Pump with single ball bearing pag. 46
EVM 45-64 Pump with doule ball bearing pag. 47

PACKING AND WEIGHT pag. 49

Ebara presents the **new vertical multistage pumps**.

EVM pumps are vertical multistage centrifugal pumps manufactured in cast iron (**EVMG**), AISI 304 stainless steel (**EVM**), AISI 316 stainless steel (**EVML**) and for drinking water (**EVMW**, WRAS approval).
The pumps are in line design: the suction and discharge ports of the base are on the same level with the same pipe dimensions.

To ever ensure the performances required in terms of total head and capacity, we can offer a comprehensive range of models with various pump sizes and a large number of stages.
We are at disposal for answering your requests in order to find the most suitable solution for all your needs.

You can also choose between a version with or without motor.

Each EVM pump is produced with the highest possible functional levels, by means of a meticulous and complete quality control programme (in accordance with the ISO 9001 standards) involving the entire manufacturing cycle.
EVM pumps are also consistent with the 94/9/CE directive about **Atex** products (Atex is the acronym for Atmospheres Explosibles), that establish the safety conditions for the machines non electrical which will be used in an area that can be potentially explosive.
All pumps belong to the GROUP II (sets to be used on the surface where is possible the development of explosive atmosphere), CATEGORY 2 (sets or safety systems which grant a high protection); you can see an example of a label data, where the symbol EX inside an hexagon is the specific marking against explosion.

EVM are all-purpose pumps, adapted for a wide range of different applications from pumping of drinking water to pumping of water containing glycol and moderately aggressive fluids:

Water treatment
- reverse osmosis systems
- distillation systems
- filtration
- light chemical applications;

Industrial washing systems
- car washing, bottle and glassware washing, parts washing, crate washing, washing and finishing of metal parts, vegetable washers, and seafood washing applications
- fire-fighting systems;

Heating and conditioning
- hot water circulation
- cooling systems
- industrial boilers;

Water supply and pressurization
- pressure boosting
- machine tools;

Agriculture and irrigation
- field irrigation
- sprinkler irrigation
- drip irrigation.

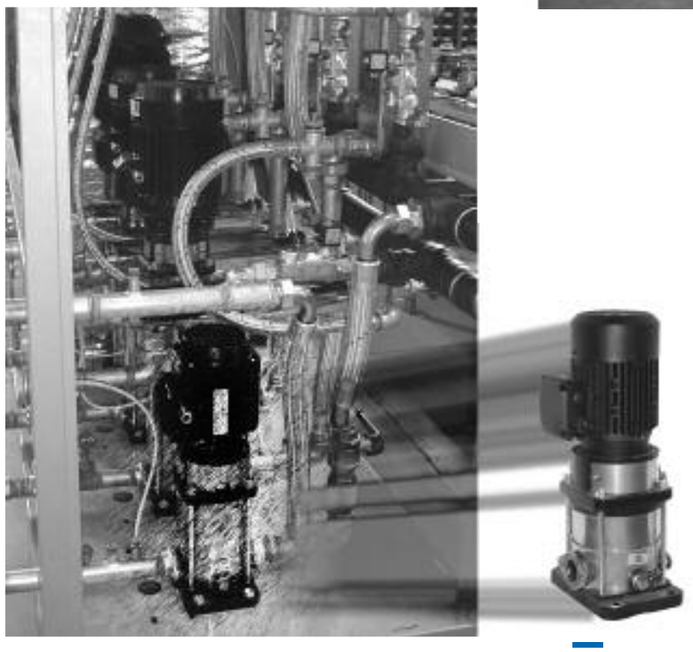

EVM 3-18

EVM | 10 | 2 | N | 5 / 1.1

POWER OUTPUT IN kW

0.37	0.55	0.75	1.1	1.5	2.2	3.0	4.0	5.5	7.5	11	15

50 Hz

FLANGE

N	OVAL FLANGES
F	ROUND FLANGES

N° OF IMPELLERS

2	3	4	5	6	8	10	11	12	14	15	16	18	20	22

m³/h AT MAX EFFICIENCY

3	5	10	18

MODEL SERIES

EVM	AISI 304 VERSION
EVML	AISI 316 VERSION
EVMG	CAST IRON VERSION
EVMW	WRAS APPROVAL

EVM 32-64

EVM | 32 | 2 - 2 | F | 5 / 3.0 | M

SINGLE PHASE ONLY

POWER OUTPUT IN kW

2.2	3.0	4.0	5.5	7.5	11	15	18.5	22	30	37

50 Hz

ROUND FLANGES

N° OF REDUCED DIAMETER IMPELLERS

0	1	2	3

N° OF IMPELLERS

1	2	3	4	5	6	7	8	9	10	11	12	13	14

m³/h AT MAX EFFICIENCY

32	45	64

MODEL SERIES

EVM	AISI 304 VERSION
EVML	AISI 316 VERSION
EVMG	CAST IRON VERSION

PERFORMANCE CHART — 2 POLES

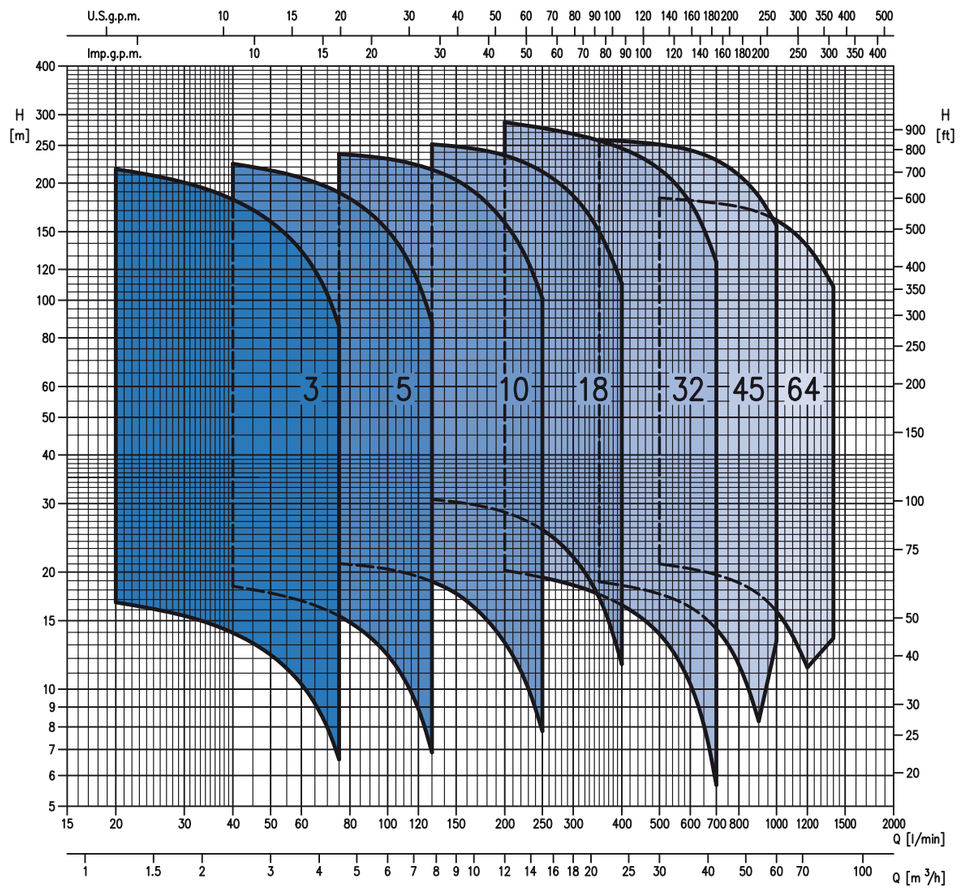

The specifications below qualify the curves shown on the following pages.

- Tolerance according to ISO 9906 Annex A;
- The curves refer to effective speed of asynchronous motors at 50 Hz;
- Measurements were carried out with clean water at 20°C of temperature and with a kinematic viscosity of ν = 1 mm²/s (1 cSt);
- The NPSH curve is an average curve obtained in the same conditions of performance curves;
- During the pump selection, consider to get a safety margin of at least 0.5 m;
- The continuous curves indicate the recommended working range, the dotted curve is only a guide;
- In order to avoid the risk of over-heating, the pumps should not be used at a flow rate below 10% of best efficiency point;
- Symbols explanation:
  - Q = volume flow rate
  - H = total head
  - P_2 = pump power input (shaft power)
  - η = pump efficiency
  - NPSH = net positive suction head required by the pump

EVM 3-5-10-18

Pump type EVM 3-5-10-18	Motor kW	Motor HP	Motor Size	Maximum working pressure (MPa)	Q = Capacity l/min 0	20	40	60	75	100	130	150	200	250	300	350	400
					m³/h 0	1.2	2.4	3.6	4.5	6.0	7.8	9	12	15	18	21	24
					H = Total manometric head in meters												
EVM 3 2N5/0.37	0.37	0.5	71	1,6	18,6	16,7	14,0	10,3	6,6	-	-	-	-	-	-	-	-
EVM 3 3N5/0.37	0.37	0.5	71	1,6	27,9	25,1	20,9	15,5	9,9	-	-	-	-	-	-	-	-
EVM 3 4N5/0.55	0.55	0.75	71	1,6	37,2	33,4	27,9	20,6	13,2	-	-	-	-	-	-	-	-
EVM 3 5N5/0.55	0.55	0.75	71	1,6	46,5	42,0	34,9	25,8	16,5	-	-	-	-	-	-	-	-
EVM 3 6N5/0.75	0.75	1	80	1,6	56,0	50,0	42,0	30,9	19,8	-	-	-	-	-	-	-	-
EVM 3 7N5/0.75	0.75	1	80	1,6	65,0	58,5	49,0	36,1	23,1	-	-	-	-	-	-	-	-
EVM 3 9N5/1.1	1.1	1.5	80	1,6	84,0	75,0	63,0	46,5	29,7	-	-	-	-	-	-	-	-
EVM 3 11N5/1.1	1.1	1.5	80	1,6	102,0	92,0	77,0	56,5	36,3	-	-	-	-	-	-	-	-
EVM 3 13N5/1.5	1.5	2	90S	1,6	121,0	109,0	90,5	67,0	43,0	-	-	-	-	-	-	-	-
EVM 3 15N5/1.5	1.5	2	90S	1,6	140,0	125,0	105,0	77,5	49,5	-	-	-	-	-	-	-	-
EVM 3 18F5/2.2	2.2	3	90L	2,5	167,0	151,0	126,0	92,5	59,5	-	-	-	-	-	-	-	-
EVM 3 22F5/2.2	2.2	3	90L	2,5	205,0	184,0	154,0	113,0	72,5	-	-	-	-	-	-	-	-
EVM 3 26F5/3.0	3	4	100	2,5	242,0	217,0	182,0	134,0	86,0	-	-	-	-	-	-	-	-
EVM 5 2N5/0.37	0.37	0.5	71	1,6	20,2	-	18,4	16,9	15,4	12,2	6,9	-	-	-	-	-	-
EVM 5 3N5/0.55	0.55	0.75	71	1,6	30,2	-	27,6	25,3	23,1	18,4	10,3	-	-	-	-	-	-
EVM 5 4N5/0.75	0.75	1	80	1,6	40,5	-	36,8	33,8	30,8	24,5	13,8	-	-	-	-	-	-
EVM 5 5N5/1.1	1.1	1.5	80	1,6	50,5	-	46,0	42,0	38,6	30,6	17,2	-	-	-	-	-	-
EVM 5 6N5/1.1	1.1	1.5	80	1,6	60,5	-	55,0	50,5	46,5	36,7	20,6	-	-	-	-	-	-
EVM 5 7N5/1.5	1.5	2	90S	1,6	70,5	-	64,5	59,0	54,0	43,0	24,1	-	-	-	-	-	-
EVM 5 8N5/1.	1.5	2	90S	1,6	80,5	-	73,5	67,5	61,5	49,0	27,5	-	-	-	-	-	-
EVM 5 10N5/2.2	2.2	3	90L	1,6	102,0	-	93,5	86,0	79,0	63,0	36,6	-	-	-	-	-	-
EVM 5 11N5/2.2	2.2	3	90L	1,6	113,0	-	103,0	94,5	86,5	69,5	40,5	-	-	-	-	-	-
EVM 5 12N5/2.2	2.2	3	90L	1,6	123,0	-	112,0	103,0	94,5	75,5	44,0	-	-	-	-	-	-
EVM 5 14N5/3.0	3	4	100	1,6	143,0	-	131,0	120,0	110,0	88,0	51,0	-	-	-	-	-	-
EVM 5 16N5/3.0	3	4	100	1,6	164,0	-	150,0	138,0	126,0	101,0	58,5	-	-	-	-	-	-
EVM 5 18F5/4.0	4	5.5	112	2,5	184,0	-	168,0	155,0	142,0	113,0	66,0	-	-	-	-	-	-
EVM 5 19F5/4.0	4	5.5	112	2,5	194,0	-	178,0	163,0	150,0	120,0	69,5	-	-	-	-	-	-
EVM 5 22F5/4.0	4	5,5	112	2,5	225,0	-	206,0	189,0	173,0	139,0	80,5	-	-	-	-	-	-
EVM 5 24F5/5.5	5.5	7,5	132S	2,5	246,0	-	224,0	206,0	189,0	151,0	88,0	-	-	-	-	-	-
EVM 10 2N5/0.75	0.75	1	80	1,6	22,0	-	-	-	21,0	20,4	18,9	17,6	13,2	7,8	-	-	-
EVM 10 3N5/1.1	1.1	1,5	80	1,6	33,0	-	-	-	31,6	30,5	28,4	26,4	19,8	11,7	-	-	-
EVM 10 4N5/1.5	1.5	2	90S	1,6	44,0	-	-	-	42,0	40,5	37,8	35,2	26,4	15,6	-	-	-
EVM 10 5N5/2.2	2.2	3	90L	1,6	55,0	-	-	-	52,5	51,0	47,5	44,0	33,0	19,5	-	-	-
EVM 10 6N5/2.2	2.2	3	90L	1,6	66,0	-	-	-	63,0	61,0	57,0	53,0	39,5	23,4	-	-	-
EVM 10 8N5/3.0	3	4	100	1,6	88,0	-	-	-	84,0	81,5	75,5	70,5	52,5	31,2	-	-	-
EVM 10 10N5/4.0	4	5,5	112	1,6	110,0	-	-	-	105,0	102,0	94,5	88,0	66,0	39,0	-	-	-
EVM 10 11N5/4.0	4	5,5	112	1,6	121,0	-	-	-	116,0	112,0	104,0	97,0	72,5	43,0	-	-	-
EVM 10 12N5/5.5	5.5	7,5	132S	1,6	134,0	-	-	-	130,0	126,0	118,0	111,0	86,5	55,0	-	-	-
EVM 10 14N5/5.5	5.5	7,5	132S	1,6	157,0	-	-	-	151,0	147,0	138,0	130,0	101,0	64,5	-	-	-
EVM 10 15F5/5.5	5.5	7,5	132S	2,5	168,0	-	-	-	162,0	158,0	148,0	139,0	108,0	69,0	-	-	-
EVM 10 16F5/7.5	7.5	10	132S	2,5	179,0	-	-	-	173,0	168,0	158,0	148,0	115,0	73,5	-	-	-
EVM 10 18F5/7.5	7.5	10	132S	2,5	202,0	-	-	-	194,0	189,0	177,0	167,0	129,0	83,0	-	-	-
EVM 10 20F5/7.5	7.5	10	132S	2,5	224,0	-	-	-	216,0	210,0	197,0	185,0	144,0	92,0	-	-	-
EVM 10 22F5/11	11	15	160M	2,5	246,0	-	-	-	238,0	231,0	217,0	204,0	158,0	101,0	-	-	-
EVM 18 2F5/2.	2.2	3	90L	1,6	32,0	-	-	-	-	-	31,0	30,3	28,5	25,7	21,9	17,2	11,6
EVM 18 3F5/3.0	3	4	100	1,6	48,0	-	-	-	-	-	46,0	45,5	43,0	38,6	32,8	25,7	17,4
EVM 18 4F5/4.0	4	5,5	112	1,6	64,0	-	-	-	-	-	61,5	60,5	57,0	51,5	44,0	34,3	23,2
EVM 18 5F5/5.5	5.5	7,5	132S	1,6	80,0	-	-	-	-	-	77,0	75,5	71,5	64,5	54,5	43,0	29,0
EVM 18 6F5/5.5	5.5	7,5	132S	1,6	96,0	-	-	-	-	-	92,0	91,0	85,5	77,0	65,5	51,5	34,8
EVM 18 7F5/7.5	7.5	10	132S	2,5	112,0	-	-	-	-	-	108,0	106,0	100,0	90,0	76,5	60,0	40,5
EVM 18 8F5/7.5	7.5	10	132S	2,5	128,0	-	-	-	-	-	123,0	121,0	114,0	103,0	87,5	68,5	46,5
EVM 18 10F5/11	11	15	160M	2,5	162,0	-	-	-	-	-	157,0	155,0	147,0	134,0	116,0	93,5	69,0
EVM 18 12F5/11	11	15	160M	2,5	194,0	-	-	-	-	-	189,0	186,0	177,0	160,0	139,0	112,0	83,0
EVM 18 14F5/15	15	20	160M	2,5	227,0	-	-	-	-	-	220,0	217,0	206,0	187,0	162,0	131,0	96,5
EVM 18 15F5/15	15	20	160M	2,5	243,0	-	-	-	-	-	236,0	233,0	221,0	201,0	174,0	141,0	104,0
EVM 18 16F5/15	15	20	160M	2,5	259,0	-	-	-	-	-	252,0	249,0	236,0	214,0	186,0	150,0	110,0

EVM 32-64

Pump type EVM 32-64	Motor kW	Motor HP	Motor Size	Maximum working pressure (MPa)	Q = Capacity l/min 0	200	350	500	600	700	900	1000	1200	1400
					m³/h 0	12	21	30	36	42	54	60	72	84
					H = Total manometric head in meters									
EVM 32 1-0F5/2.2	2,2	3	90L	1,6	22,6	20,2	17,5	13,9	10,3	5,7	-	-	-	-
EVM 32 2-2F5/3.0	3	4	100	1,6	39,0	34,6	29,7	21,2	14,2	-	-	-	-	-
EVM 32 2-0F5/4.0	4	5,5	112	1,6	45,0	40,5	36,0	29,5	23,2	14,9	-	-	-	-
EVM 32 3-3F5/5.5	5,5	7,5	132S	1,6	55,0	52,0	45,0	32,8	22,7	-	-	-	-	-
EVM 32 3-0F5/5.5	5,5	7,5	132S	1,6	68,0	61,0	54,5	45,0	36,1	24,1	-	-	-	-
EVM 32 4-3F5/7.5	7,5	10	132S	1,6	81,0	72,5	63,5	48,5	35,6	-	-	-	-	-
EVM 32 4-0F5/7.5	7,5	10	132S	1,6	90,5	81,5	73,0	61,0	49,0	33,3	-	-	-	-
EVM 32 5-3F5/11	11	15	160M	1,6	104,0	93,0	82,0	64,0	48,5	30,5	-	-	-	-
EVM 32 5-0F5/11	11	15	160M	1,6	113,0	102,0	91,5	76,5	62,0	42,5	-	-	-	-
EVM 32 6-3F5/11	11	15	160M	1,6	126,0	114,0	100,0	79,5	61,5	39,7	-	-	-	-
EVM 32 6-0F5/11	11	15	160M	1,6	136,0	123,0	110,0	92,0	75,0	51,5	-	-	-	-
EVM 32 7-3F5/15	15	20	160M	1,6	149,0	134,0	119,0	95,5	74,5	49,0	-	-	-	-
EVM 32 7-0F5/15	15	20	160M	1,6	158,0	143,0	128,0	108,0	87,5	61,0	-	-	-	-
EVM 32 8-3F5/15	15	20	160M	2,5	172,0	155,0	137,0	111,0	87,0	58,0	-	-	-	-
EVM 32 8-0F5/15	15	20	160M	2,5	181,0	164,0	147,0	123,0	101,0	70,0	-	-	-	-
EVM 32 9-3F5/18.5	18,5	25	160L	2,5	194,0	175,0	156,0	127,0	100,0	67,5	-	-	-	-
EVM 32 9-0F5/18.5	18,5	25	160L	2,5	203,0	184,0	165,0	139,0	114,0	79,5	-	-	-	-
EVM 32 10-3F5/18.5	18,5	25	160L	2,5	217,0	196,0	174,0	142,0	113,0	76,5	-	-	-	-
EVM 32 10-1F5/18.5	18,5	25	160L	2,5	223,0	202,0	180,0	151,0	122,0	84,5	-	-	-	-
EVM 32 11-3F5/22	22	30	180	2,5	239,0	216,0	193,0	158,0	126,0	85,5	-	-	-	-
EVM 32 11-0F5/22	22	30	180	2,5	249,0	225,0	202,0	170,0	139,0	97,5	-	-	-	-
EVM 32 12-3F5/22	22	30	180	2,5	262,0	237,0	211,0	174,0	139,0	95,0	-	-	-	-
EVM 32 12-1F5/22	22	30	180	3,0	268,0	243,0	217,0	182,0	148,0	103,0	-	-	-	-
EVM 32 13-3F5/30	30	40	200	3,0	285,0	257,0	229,0	189,0	152,0	104,0	-	-	-	-
EVM 32 13-0F5/30	30	40	200	3,0	294,0	266,0	239,0	202,0	165,0	116,0	-	-	-	-
EVM 32 14-3F5/30	30	40	200	3,0	307,0	278,0	248,0	205,0	165,0	113,0	-	-	-	-
EVM 32 14-0F5/30	30	40	200	3,0	299,0	287,0	257,0	217,0	178,0	125,0	-	-	-	-
EVM 45 1-1F5/3.0	3	4	100	1,6	21,0	-	18,9	17,6	16,3	14,3	8,3	-	-	-
EVM 45 1-0F5/4.0	4	5,5	112	1,6	27,0	-	25,6	24,6	23,5	21,8	16,7	13,3	-	-
EVM 45 2-2F5/5.5	5,5	7,5	132S	1,6	42,0	-	38,1	35,8	33,4	29,8	18,6	-	-	-
EVM 45 2-0F5/7.5	7,5	10	132S	1,6	54,0	-	51,5	50,0	48,0	45,0	35,4	29,1	-	-
EVM 45 3-2F5/11	11	15	160M	1,6	69,0	-	64,0	61,0	58,0	53,0	37,3	-	-	-
EVM 45 3-0F5/11	11	15	160M	1,6	81,0	-	77,5	75,0	72,5	68,0	54,0	45,0	-	-
EVM 45 4-2F5/15	15	20	160M	2,5	96,0	-	90,0	86,0	82,0	76,0	56,0	43,0	-	-
EVM 45 4-0F5/15	15	20	160M	2,5	108,0	-	103,0	100,0	96,5	91,0	73,0	60,5	-	-
EVM 45 5-2F5/18.5	18,5	25	160L	2,5	123,0	-	116,0	111,0	107,0	99,0	74,5	58,5	-	-
EVM 45 5-0F5/18.5	18,5	25	160L	2,5	135,0	-	129,0	125,0	121,0	114,0	91,5	76,5	-	-
EVM 45 6-2F5/22	22	30	180	2,5	150,0	-	142,0	137,0	131,0	122,0	93,5	74,5	-	-
EVM 45 6-0F5/22	22	30	180	2,5	162,0	-	155,0	151,0	146,0	137,0	110,0	92,5	-	-
EVM 45 7-2F5/30	30	40	200	2,5	177,0	-	168,0	162,0	155,0	145,0	112,0	90,5	-	-
EVM 45 7-0F5/30	30	40	200	2,5	189,0	-	181,0	176,0	170,0	160,0	129,0	108,0	-	-
EVM 45 8-2F5/30	30	40	200	2,5	204,0	-	194,0	187,0	180,0	168,0	131,0	106,0	-	-
EVM 45 8-0F5/30	30	40	200	2,5	216,0	-	207,0	201,0	194,0	183,0	148,0	124,0	-	-
EVM 45 9-2F5/30	30	40	200	2,5	231,0	-	219,0	212,0	204,0	191,0	150,0	122,0	-	-
EVM 45 9-0F5/37	37	50	200	2,5	243,0	-	233,0	226,0	219,0	206,0	166,0	140,0	-	-
EVM 45 10-2F5/37	37	50	200	3,0	258,0	-	245,0	237,0	229,0	214,0	168,0	138,0	-	-
EVM 45 10-0F5/37	37	50	200	3,0	270,0	-	259,0	251,0	243,0	229,0	185,0	156,0	-	-
EVM 64 1-1F5/4.0	4	5,5	100	1,6	23,7	-	-	21,0	20,4	19,7	17,5	15,9	11,4	-
EVM 64 1-0F5/5.5	5,5	7,5	132S	1,6	29,3	-	-	26,6	26,1	25,4	23,7	22,3	18,5	13,5
EVM 64 2-2F5/7.5	7,5	10	132S	1,6	47,5	-	-	42,5	41,5	40,5	36,5	33,5	25,3	-
EVM 64 2-1F5/11	11	15	160M	1,6	53,0	-	-	48,0	47,0	46,0	42,5	40,0	32,4	23,0
EVM 64 2-0F5/11	11	15	160M	1,6	58,5	-	-	53,5	53,0	52,0	49,0	46,5	39,5	30,6
EVM 64 3-3F5/15	15	20	160M	1,6	71,0	-	-	64,0	62,5	61,0	55,5	51,0	39,3	-
EVM 64 3-2F5/15	15	20	160M	1,6	76,5	-	-	69,5	68,0	66,5	61,5	57,5	46,5	32,5
EVM 64 3-1F5/15	15	20	160M	1,6	82,5	-	-	75,0	74,0	72,5	68,0	64,0	53,5	40,0
EVM 64 3-0F5/18.5	18,5	25	160L	1,6	88,0	-	-	80,5	79,5	78,0	74,0	70,5	60,5	47,5
EVM 64 4-3F5/18.5	18,5	25	160L	1,6	100,0	-	-	91,0	89,0	87,0	80,5	75,5	60,5	42,0
EVM 64 4-2F5/18.5	18,5	25	160L	1,6	106,0	-	-	96,5	95,0	93,0	87,0	81,5	67,5	49,5
EVM 64 4-1F5/22	22	30	180	1,6	112,0	-	-	102,0	101,0	98,5	93,0	88,0	74,5	57,0
EVM 64 4-0F5/22	22	30	180	1,6	117,0	-	-	108,0	106,0	104,0	99,0	94,5	81,5	64,5
EVM 64 5-3F5/30	30	40	200	1,6	130,0	-	-	118,0	116,0	114,0	106,0	99,5	81,5	59,0
EVM 64 5-2F5/30	30	40	200	1,6	135,0	-	-	124,0	122,0	119,0	112,0	106,0	88,5	66,5
EVM 64 5-1F5/30	30	40	200	1,6	141,0	-	-	129,0	127,0	125,0	118,0	112,0	95,5	74,0
EVM 64 5-0F5/30	30	40	200	1,6	147,0	-	-	135,0	133,0	131,0	124,0	119,0	103,0	81,5
EVM 64 6-3F5/30	30	40	200	1,6	159,0	-	-	145,0	143,0	140,0	131,0	124,0	103,0	76,0
EVM 64 6-2F5/30	30	40	200	2,5	165,0	-	-	151,0	148,0	146,0	137,0	130,0	110,0	83,5
EVM 64 6-1F5/37	37	50	200	2,5	170,0	-	-	156,0	154,0	151,0	143,0	136,0	117,0	91,0
EVM 64 6-0F5/37	37	50	200	2,5	176,0	-	-	162,0	160,0	157,0	149,0	143,0	124,0	99,0
EVM 64 7-3F5/37	37	50	200	2,5	188,0	-	-	172,0	169,0	166,0	156,0	148,0	124,0	93,0
EVM 64 7-2F5/37	37	50	200	2,5	194,0	-	-	178,0	175,0	172,0	162,0	154,0	131,0	101,0
EVM 64 7-1F5/37	37	50	200	2,5	200,0	-	-	183,0	181,0	178,0	168,0	161,0	138,0	108,0

PUMP

EVM pumps are made of a robust construction and an advanced technical solutions:

- all parts in contact of liquid with EVM, EVMW and EVML models in stainless steel
- spline shaft with a high mechanical stress strength
- shaft seals guarantee the optimization of the results in terms of durability, reliability and replaceability. On request a special mechanical shaft seal is suitable for different types of fluids.
- bearings made of tungsten carbide (tungsten carbide is more resistant to "heat cracking" that can be caused by cavitation or dry running)
- liner-rings are "floating" and easily replaceable
- impellers and the intermediate casings made of a thick stamped stainless steel

MOTORS

- Pumps configured for the installation of a standard IEC motor
- Pumps suitable for different motor types: explosion proof, high efficiency, low noise and with integrated inverter (EVM VS)
- 50 - 60 Hz
- 2 - 4 poles
- Motors with various voltages and frequencies
- Motors conforming to UL/CSA standards on request.

OPTIONAL ON REQUEST. DIFFERENT POSITIONS OF MOTOR TERMINAL BOX

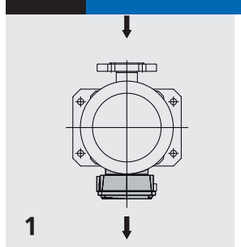

Terminal box on the delivery side standard.

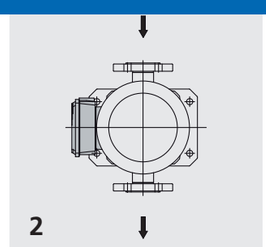

Terminal box on the left of the delivery side.

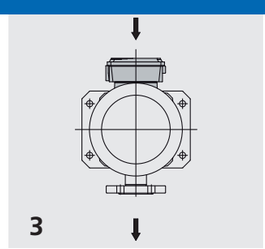

Terminal box opposite delivery side.

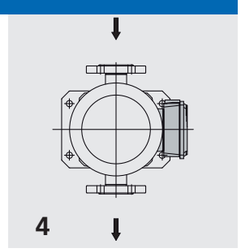

Terminal box on the right of the delivery side.

EVM
VERTICAL MULTISTAGE CENTRIFUGAL PUMPS
IN CAST IRON - AISI 304 - AISI 316
TECHNICAL FEATURES

FLANGES

EVM pumps are available with two different types of flanges: oval flanges (N) and round flanges (R).

	EVMG-EVM-EVML															
	3		5		10		18		32			45			64	
	1,6 MPa	2,5 MPa	1,6 MPa	2,5 MPa	1,6 MPa	2,5 MPa	1,6 MPa	2,5 MPa	1,6 MPa	2,5 MPa	3 MPa	1,6 MPa	2,5 MPa	3 MPa	1,6 MPa	2,5 MPa
N	•	X	•	X	•	X	X	X	X	X	X	X	X	X	X	X
F	R	•	R	•	R	•	•	•	•	•	•	•	•	•	•	•

• = Standard; R = On request; X = Not available

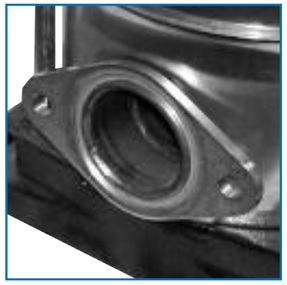

Oval flanges (N)

Round flanges (R)

Three different types of counterflanges kits are also available:

- galvanised for the EVMG model
- AISI 304 stainless steel for the EVM model
- AISI 316 stainless steel for the EVML model.

A rotating shaft seal is fitted between the rotating pump shaft and the stationary pump/motor housing. The photo shows an example of EVM pump incorporating rotating shaft seal.

PUMP

Type		EVM	EVML	EVMG	EVMW*
Liquid Handled	Type of liquid	Clean water, water with glycol and moderately aggressive fluids			Drinking water
	Temperature [°C]	-15 to + 120 standard			-15 to + 85
	Max solid content	50 ppm (Particle size 0,1-0,25 mm or less)			/
	Max chlorine ion density	500 ppm			/
Maximum working pressure	[MPa]	1,6 / 2,5 / 3,0			
	[bar]	16 / 25 / 30			
Construction	Impeller	Closed centrifugal type			
	Shaft seal type	Mechanical seal			
	Bearing	Sealed ball bearing with permanent grease			
Pipe Connection	Suction / Discharge	AISI 304	AISI 316	AISI 304	AISI 304
Material	Impeller	AISI 304	AISI 316	AISI 304	AISI 304
	Intermediate casing	AISI 304	AISI 316	AISI 304	AISI 304
	Bottom casing	AISI 304	AISI 316	Cast iron	AISI 304
	Casing cover	AISI 304	AISI 316	Cast iron	AISI 304
	Outer casing	AISI 304	AISI 316	AISI 304	AISI 304
	Shaft	AISI 316			
	Liner ring	EPDM / AISI 304	PFTE / AISI 316	EPDM / AISI 304	
	Motor bracket	Cast Iron / AISI 304	Cast Iron / AISI 316	Cast Iron	Cast Iron / AISI 304
	O-ring	EPDM	FPM	EPDM	EPDM
Applicable Standard of Test		ISO 9006 Annex A			

* = WRAS approved for EVMW (EVM 3-18)

MOTOR

Type		Electric - TEFC	
		Single Phase	Three Phase
N. of Poles		2	
Insulation Class		Class F (Class B for temperature rise)	
Protection degree		IP 55	
Power rating	[kW]	0,37 ÷ 2,2	0,37 ÷ 37
	[HP]	0,5 ÷ 3	0,5 ÷ 50
Frequency	[Hz]	50	
Voltage	[V]	230 ±10% (up to 2,2 kW)	230/400 V ±10% Delta conn.
			(up to 4 kW)
			400/690 V ±10%
			(above 5,5 kW)
Over load protection		User to provide	
Casing material		Aluminium	
Flange mount IEC motor		IM B14 (up to 4 kW)	
		IM B5 (above 5,5 kW)	

Standard motors for ambient temperatures up to 40°C and an altitude of 1000 m.
For different applications, please contact our sales network.

TECHNICAL DATA EVM 3-18 — 2900 min⁻¹

Type pumps EVM 3-18	Motor			Capacitor		Full load effic. and power factor Single phase		Full load effic. and power factor Three phase		Full load current [A]				Locked rotor corrent [A]			
	kW	HP	Size	Single-phase µF	Vc	η %	cos ø	η %	cos ø	Single phase	Three phase 230V	Three phase 400V	Three phase 690V	Single phase	Three phase 230V	Three phase 400V	Three phase 690V
EVM 3 2N5/0,37	0,37	0,5	71	16	400	63	0,98	65,3	0,70	2,6	1,9	1,1	-	7,5	9,0	5,2	-
EVM 3 3N5/0,37	0,37	0,5	71	16	400	63	0,98	65,3	0,70	2,6	1,9	1,1	-	7,5	9,0	5,2	-
EVM 3 4N5/0,55	0,55	0,75	71	16	400	65	0,97	70,8	0,70	3,8	2,8	1,6	-	10,3	13,3	7,7	-
EVM 3 5N5/0,55	0,55	0,75	71	16	400	65	0,97	70,8	0,70	3,8	2,8	1,6	-	10,3	13,3	7,7	-
EVM 3 6N6/0,75	0,75	1	80	25	400	65	0,95	74,5	0,78	5,3	3,3	1,9	-	21,8	16,5	9,5	-
EVM 3 7N6/0,75	0,75	1	80	25	400	65	0,97	74,5	0,78	5,3	3,3	1,9	-	21,8	16,5	9,5	-
EVM 3 9N5/1,1	1,1	1,5	80	36	400	74	0,97	77,6	0,82	6,7	4,3	2,5	-	23,5	19,9	11,5	-
EVM 3 11N5/1,1	1,1	1,5	80	36	400	74	0,97	77,6	0,82	6,7	4,3	2,5	-	23,5	19,9	11,5	-
• EVM 3 13N5/1,5	1,5	2	90S	35	400	79	0,97	78,6	0,82	8,8	5,9	3,4	-	46,0	29,4	17,0	-
• EVM 3 15N5/1,5	1,5	2	90S	35	400	79	0,97	78,6	0,82	8,8	5,9	3,4	-	46,0	29,4	17,0	-
• EVM 3 18F5/2,2	2,2	3	90L	40	400	78	0,97	81,8	0,81	12,9	8,5	4,9	-	61,0	60,3	34,8	-
• EVM 3 22F5/2,2	2,2	3	90L	40	400	78	0,97	81,8	0,81	12,9	8,5	4,9	-	61,0	60,3	34,8	-
EVM 3 26F5/3,0	3	4	100	-	-	-	-	82,6	0,85	-	11,3	6,5	-	-	81,4	47,0	-
EVM 5 2N5/0,37	0,37	0,5	71	16	400	63	0,98	65,3	0,70	2,6	1,9	1,1	-	7,5	9,0	5,2	-
EVM 5 3N5/0,55	0,55	0,75	71	16	400	65	0,97	70,8	0,70	3,8	2,8	1,6	-	10,3	13,3	7,7	-
EVM 5 4N6/0,75	0,75	1	80	25	400	65	0,95	74,5	0,78	5,3	3,3	1,9	-	21,8	16,5	9,5	-
EVM 5 5N5/1,1	1,1	1,5	80	36	400	74	0,97	77,6	0,82	6,7	4,3	2,5	-	23,5	19,9	11,5	-
EVM 5 6N5/1,1	1,1	1,5	80	36	400	74	0,97	77,6	0,82	6,7	4,3	2,5	-	23,5	19,9	11,5	-
• EVM 5 7N5/1,5	1,5	2	90S	35	400	79	0,97	78,6	0,82	8,8	5,9	3,4	-	46,0	29,4	17,0	-
• EVM 5 8N5/1,5	1,5	2	90S	35	400	79	0,97	78,6	0,82	8,8	5,9	3,4	-	46,0	29,4	17,0	-
• EVM 5 10N5/2,2	2,2	3	90L	40	400	78	0,97	81,8	0,81	12,9	8,5	4,9	-	61,0	60,3	34,8	-
• EVM 5 11N5/2,2	2,2	3	90L	40	400	78	0,97	81,8	0,81	12,9	8,5	4,9	-	61,0	60,3	34,8	-
• EVM 5 12N5/2,2	2,2	3	90L	40	400	78	0,97	81,8	0,81	12,9	8,5	4,9	-	61,0	60,3	34,8	-
EVM 5 14N5/3,0	3	4	100	-	-	-	-	82,6	0,85	-	11,3	6,5	-	-	81,4	47,0	-
EVM 5 16N5/3,0	3	4	100	-	-	-	-	82,6	0,85	-	11,3	6,5	-	-	81,4	47,0	-
EVM 5 18F5/4,0	4	5,5	112	-	-	-	-	85,0	0,84	-	14,7	8,5	-	-	119,5	69,0	-
EVM 5 19F5/4,0	4	5,5	112	-	-	-	-	85,0	0,84	-	14,7	8,5	-	-	119,5	69,0	-
EVM 5 22F5/4,0	4	5,5	112	-	-	-	-	85,0	0,84	-	14,7	8,5	-	-	119,5	69,0	-
EVM 5 24N5/5,5	5,5	7,5	132S	-	-	-	-	85,7	0,86	-	-	10,8	6,2	-	-	71,3	41,2
EVM 10 2N6/0,75	0,75	1	80	25	400	65	0,95	74,5	0,78	5,3	3,3	1,9	-	21,8	16,5	9,5	-
EVM 10 3N5/1,1	1,1	1,5	80	36	400	74	0,97	77,6	0,82	6,7	4,3	2,5	-	23,5	19,9	11,5	-
• EVM 10 4N5/1,5	1,5	2	90S	35	400	79	0,97	78,6	0,82	8,8	5,9	3,4	-	46,0	29,4	17,0	-
• EVM 10 5N5/2,2	2,2	3	90L	40	400	78	0,97	81,8	0,81	12,9	8,5	4,9	-	61,0	60,3	34,8	-
• EVM 10 6N5/2,2	2,2	3	90L	40	400	78	0,97	81,8	0,81	12,9	8,5	4,9	-	61,0	60,3	34,8	-
EVM 10 8N5/3,0	3	4	100	-	-	-	-	82,6	0,85	-	11,3	6,5	-	-	81,4	47,0	-
EVM 10 10N5/4,0	4	5,5	112	-	-	-	-	85,0	0,84	-	14,7	8,5	-	-	119,5	69,0	-
EVM 10 11N5/4,0	4	5,5	112	-	-	-	-	85,0	0,84	-	14,7	8,5	-	-	119,5	69,0	-
EVM 10 12N5/5,5	5,5	7,5	132S	-	-	-	-	85,7	0,86	-	-	10,8	6,2	-	-	71,3	41,2
EVM 10 14N5/5,5	5,5	7,5	132S	-	-	-	-	85,7	0,86	-	-	10,8	6,2	-	-	71,3	41,2
EVM 10 15F5/5,5	5,5	7,5	132S	-	-	-	-	85,7	0,86	-	-	10,8	6,2	-	-	71,3	41,2
EVM 10 16F5/7,5	7,5	10	132S	-	-	-	-	87,0	0,89	-	-	14,1	8,1	-	-	101,5	58,6
EVM 10 18F5/7,5	7,5	10	132S	-	-	-	-	87,0	0,89	-	-	14,1	8,1	-	-	101,5	58,6
EVM 10 20F5/7,5	7,5	10	132S	-	-	-	-	87,0	0,89	-	-	14,1	8,1	-	-	101,5	58,6
EVM 10 22F5/11	11	15	160M	-	-	-	-	88,7	0,84	-	-	21,5	12,4	-	-	144,0	83,1
• EVM 18 2F5/2,2	2,2	3	90L	40	400	78	0,97	81,8	0,81	12,9	8,5	4,9	-	61,0	60,3	34,8	-
EVM 18 3F5/3,0	3	4	100	-	-	-	-	82,6	0,85	-	11,3	6,5	-	-	81,4	47,0	-
EVM 18 4F5/4,0	4	5,5	112	-	-	-	-	85,0	0,84	-	14,7	8,5	-	-	119,5	69,0	-
EVM 18 5F5/5,5	5,5	7,5	132S	-	-	-	-	85,7	0,86	-	-	10,8	6,2	-	-	71,3	41,2
EVM 18 6F5/5,5	5,5	7,5	132S	-	-	-	-	85,7	0,86	-	-	10,8	6,2	-	-	71,3	41,2
EVM 18 7F5/7,5	7,5	10	132S	-	-	-	-	87,0	0,89	-	-	14,1	8,1	-	-	101,5	58,6
EVM 18 8F5/7,5	7,5	10	132S	-	-	-	-	87,0	0,89	-	-	14,1	8,1	-	-	101,5	58,6
EVM 18 10F5/11	11	15	160M	-	-	-	-	88,7	0,84	-	-	21,5	12,4	-	-	144,0	83,1
EVM 18 12F5/11	11	15	160M	-	-	-	-	88,7	0,84	-	-	21,5	12,4	-	-	144,0	83,1
EVM 18 14F5/15	15	20	160M	-	-	-	-	89,7	0,85	-	-	28,5	16,5	-	-	205,2	118,5
EVM 18 15F5/15	15	20	160M	-	-	-	-	89,7	0,85	-	-	28,5	16,5	-	-	205,2	118,5
EVM 18 16N5/15	15	20	160M	-	-	-	-	89,7	0,85	-	-	28,5	16,5	-	-	205,2	118,5

• Ebara single-phase motors

TECHNICAL DATA EVM 32

Type pumps EVM 32	Motor			Full load effic. and power factor Three phase		Full load current [A] Three phase			Locked rotor corrent [A] Three phase		
	kW	HP	Size	η %	cos ø	230V	400V	690V	230V	400V	690V
EVM 32 1-0F5/2,2	2,2	3	90L	81,8	0,81	8,5	4,9	-	60,3	34,8	-
EVM 32 2-2F5/3,0	3	4	100	82,6	0,85	11,3	6,5	-	81,4	47,0	-
EVM 32 2-0F5/4,0	4	5,5	112	85,0	0,84	14,7	8,5	-	119,5	69,0	-
EVM 32 3-3F5/5,5	5,5	7,5	132S	85,7	0,86	-	10,8	6,2	-	71,3	41,2
EVM 32 3-0F5/5,5	5,7	7,5	132S	85,7	0,86	-	10,8	6,2	-	71,3	41,2
EVM 32 4-3F5/7,5	7,5	10	132S	87,0	0,89	-	14,1	8,1	-	101,5	58,6
EVM 32 4-0F5/7,5	7,5	10	132S	87,0	0,89	-	14,1	8,1	-	101,5	58,6
EVM 32 5-3F5/11	11	15	160M	88,7	0,84	-	21,5	12,4	-	144,0	83,1
EVM 32 5-0F5/11	11	15	160M	88,7	0,84	-	21,5	12,4	-	144,0	83,1
EVM 32 6-3F5/11	11	15	160M	88,7	0,84	-	21,5	12,4	-	144,0	83,1
EVM 32 6-0F5/11	11	15	160M	88,7	0,84	-	21,5	12,4	-	144,0	83,1
EVM 32 7-3F5/15	15	20	160M	89,7	0,85	-	28,5	16,5	-	205,2	118,5
EVM 32 7-0F5/15	15	20	160M	89,7	0,85	-	28,5	16,5	-	205,2	118,5
EVM 32 8-3F5/15	15	20	160M	89,7	0,85	-	28,5	16,5	-	205,2	118,5
EVM 32 8-0F5/15	15	20	160M	89,7	0,85	-	28,5	16,5	-	205,2	118,5
EVM 32 9-3F5/18,5	18,5	25	160L	90,4	0,86	-	34,5	18,9	-	262,2	151,4
EVM 32 9-0F5/18,5	18,5	25	160L	90,4	0,86	-	34,5	18,9	-	262,2	151,4
EVM 32 10-3F5/18,5	18,5	25	160L	90,4	0,86	-	34,5	18,9	-	262,2	151,4
EVM 32 10-1F5/18,5	18,5	25	160L	90,4	0,86	-	34,5	18,9	-	262,2	151,4
EVM 32 11-3F5/22	22	30	180	90,8	0,86	-	41,0	23,7	-	303,4	175,2
EVM 32 11-0F5/22	22	30	180	90,8	0,86	-	41,0	23,7	-	303,4	175,2
EVM 32 12-3F5/22	22	30	180	90,8	0,86	-	41,0	23,7	-	303,4	175,2
EVM 32 12-1F5/22	22	30	180	90,8	0,86	-	41,0	23,7	-	303,4	175,2
EVM 32 13-3F5/30	30	40	200	91,6	0,85	-	56,0	32,3	-	436,8	252,2
EVM 32 13-0F5/30	30	40	200	91,6	0,85	-	56,0	32,3	-	436,8	252,2
EVM 32 14-3F5/30	30	40	200	91,6	0,85	-	56,0	32,3	-	436,8	252,2
EVM 32 14-0F5/30	30	40	200	91,6	0,85	-	56,0	32,3	-	436,8	252,2

TECHNICAL DATA EVM 45

Type pumps EVM 32	Motor			Full load effic. and power factor Three phase		Full load current [A] Three phase			Locked rotor corrent [A] Three phase		
	kW	HP	Size	η %	cos ø	230V	400V	690V	230V	400V	690V
EVM 45 1-1F5/3,0	3	4	100	82,6	0,85	11,3	6,5	-	81,4	47	-
EVM 45 1-0F5/4,0	4	5.5	112	85,0	0,84	14,7	8,5	-	119,5	69	-
EVM 45 2-2F5/5,5	5.5	7.5	132S	85,7	0,86	-	10,8	6,2	-	71,3	41,2
EVM 45 2-0F5/7,5	7.5	10	132S	87,0	0,89	-	14,1	8,1	-	101,5	58,6
EVM 45 3-2F5/11	11	15	160M	88,7	0,84	-	21,5	12,4	-	144,0	83,1
EVM 45 3-0F5/11	11	15	160M	88,7	0,84	-	21,5	12,4	-	144,0	83,1
EVM 45 4-2F5/15	15	20	160M	89,7	0,85	-	28,5	16,5	-	205,2	118,5
EVM 45 4-0F5/15	15	20	160M	89,7	0,85	-	28,5	16,5	-	205,2	118,5
EVM 45 5-2F5/18,5	18.5	25	160L	90,4	0,86	-	34,5	18,9	-	262,2	151,4
EVM 45 5-0F5/18,5	18.5	25	160L	90,4	0,86	-	34,5	18,9	-	262,2	151,4
EVM 45 6-2F5/22	22	30	180	90,8	0,86	-	41,0	23,7	-	303,4	175,2
EVM 45 6-0F5/22	22	30	180	90,8	0,86	-	41,0	23,7	-	303,4	175,2
EVM 45 7-2F5/30	30	40	200	91,6	0,85	-	56,0	32,3	-	436,8	252,2
EVM 45 7-0F5/30	30	40	200	91,6	0,85	-	56,0	32,3	-	436,8	252,2
EVM 45 8-2F5/30	30	40	200	91,6	0,85	-	56,0	32,3	-	436,8	252,2
EVM 45 8-0F5/30	30	40	200	91,6	0,85	-	56,0	32,3	-	436,8	252,2
EVM 45 9-2F5/30	30	40	200	91,6	0,85	-	56,0	32,3	-	436,8	252,2
EVM 45 9-0F5/37	37	50	200	92,2	0,86	-	67,5	39,0	-	519,7	300,0
EVM 45 10-2F5/37	37	50	200	92,2	0,86	-	67,5	39,0	-	519,7	300,0
EVM 45 10-0F5/37	37	50	200	92,2	0,86	-	67,5	39,0	-	519,7	300,0

EVM
VERTICAL MULTISTAGE CENTRIFUGAL PUMPS
IN CAST IRON - AISI 304 - AISI 316
ELECTRICAL DATA

TECHNICAL DATA EVM 64

Type pumps EVM 32	Motor			Full load effic. and power factor Three phase		Full load current [A] Three phase			Locked rotor corrent [A] Three phase		
	kW	HP	Size	η %	cos ø	230V	400V	690V	230V	400V	690V
EVM 64 1-1F5/4,0	4	5,5	112	85,0	0,84	14,7	8,5	-	119,5	69,0	-
EVM 64 1-0F5/5,5	5,5	7,5	132	85,7	0,86	-	10,8	6,2	-	71,3	41,2
EVM 64 2-2F5/7,5	7,5	10	132	87,0	0,89	-	14,1	8,1	-	101,5	58,6
EVM 64 2-1F5/11	11	15	160M	88,7	0,84	-	21,5	12,4	-	144,0	83,1
EVM 64 2-0F5/11	11	15	160M	88,7	0,84	-	21,5	12,4	-	144,0	83,1
EVM 64 3-3F5/15	15	20	160M	89,7	0,85	-	28,5	16,5	-	205,2	118,5
EVM 64 3-2F5/15	15	20	160M	89,7	0,85	-	28,5	16,5	-	205,2	118,5
EVM 64 3-1F5/15	15	20	160M	89,7	0,85	-	28,5	16,5	-	205,2	118,5
EVM 64 3-0F5/18,5	18,5	25	160L	90,4	0,86	-	34,5	18,9	-	262,2	151,4
EVM 64 4-3F5/18,5	18,5	25	160L	90,4	0,86	-	34,5	18,9	-	262,2	151,4
EVM 64 4-2F5/18,5	18,5	25	160L	90,4	0,86	-	34,5	18,9	-	262,2	151,4
EVM 64 4-1F5/22	22	30	180	90,8	0,86	-	41,0	23,7	-	303,4	175,2
EVM 64 4-0F5/22	22	30	180	90,8	0,86	-	41,0	23,7	-	303,4	175,2
EVM 64 5-3F5/30	30	40	200	91,6	0,85	-	56,0	32,3	-	436,8	252,2
EVM 64 5-2F5/30	30	40	200	91,6	0,85	-	56,0	32,3	-	436,8	252,2
EVM 64 5-1F5/30	30	40	200	91,6	0,85	-	56,0	32,3	-	436,8	252,2
EVM 64 5-0F5/30	30	40	200	91,6	0,85	-	56,0	32,3	-	436,8	252,2
EVM 64 6-3F5/30	30	40	200	91,6	0,85	-	56,0	32,3	-	436,8	252,2
EVM 64 6-2F5/30	30	40	200	91,6	0,85	-	56,0	32,3	-	436,8	252,2
EVM 64 6-1F5/37	37	50	200	92,2	0,86	-	67,5	39,0	-	519,7	300,0
EVM 64 6-0F5/37	37	50	200	92,2	0,86	-	67,5	39,0	-	519,7	300,0
EVM 64 7-3F5/37	37	50	200	92,2	0,86	-	67,5	39,0	-	519,7	300,0
EVM 64 7-2F5/37	37	50	200	92,2	0,86	-	67,5	39,0	-	519,7	300,0
EVM 64 7-1F5/37	37	50	200	92,2	0,86	-	67,5	39,0	-	519,7	300,0

NOISE DATA
Airborne noise

MOTOR Power kW	Size Mec	50 Hz L_{pA} - dB (A)*	50 Hz L_{wA} - dB (A)**
0.37	71	< 70	--
0.55	71	< 70	--
0.75	80	< 70	--
1.1	80	< 70	--
1.5	90	< 70	--
2.2	90	< 70	--
3	100	70	70
4	112	73	83
5.5	132	73	83
7.5	132	73	83
11	160	77	88
15	160	77	88
18.5	160	77	88
22	180	79	90
30	200	81	92
37	200	83	94

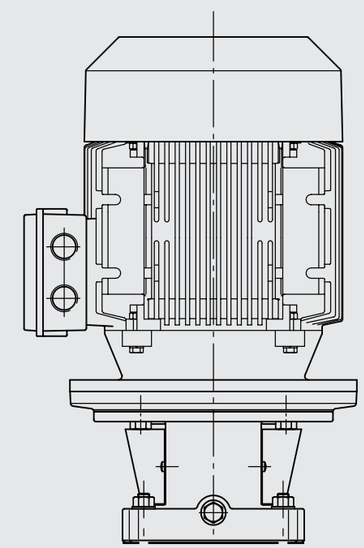

* Sound pressure level - Mean value of several measures at 1m distance around the pump. Tolerance ± 2.5 dB
** Sound power level. Tolerance ± 2.5 dB

EVM VERTICAL MULTISTAGE CENTRIFUGAL PUMPS
IN CAST IRON - AISI 304 - AISI 316
EBARA TECHNOLOGY

EVM 3-5-10-18 without ball bearing — TECHNICAL FEATURES

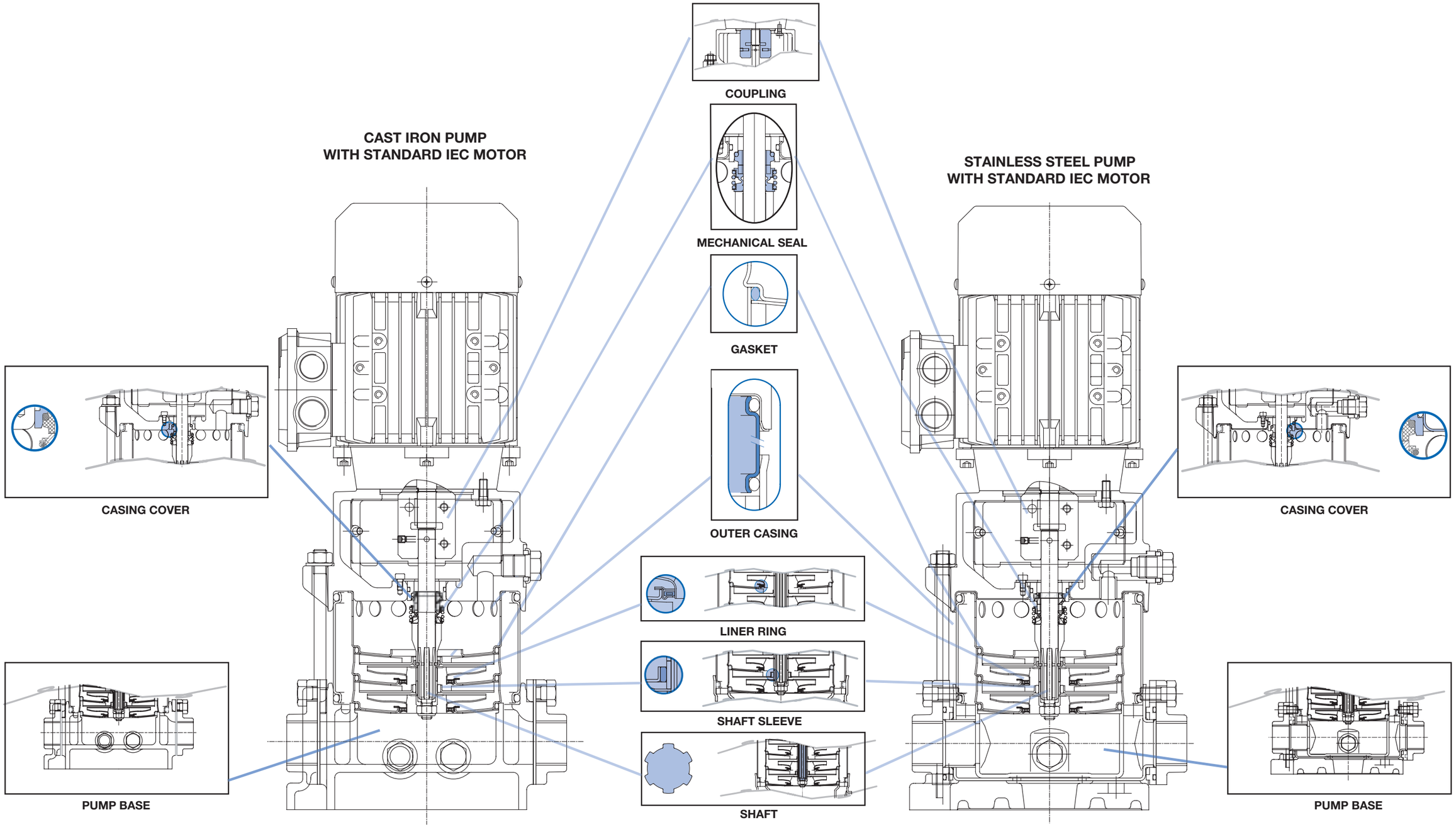

EVM VERTICAL MULTISTAGE CENTRIFUGAL PUMPS
IN CAST IRON - AISI 304 - AISI 316
EBARA TECHNOLOGY

EVM 3-5-10-18 with ball bearing — TECHNICAL FEATURES

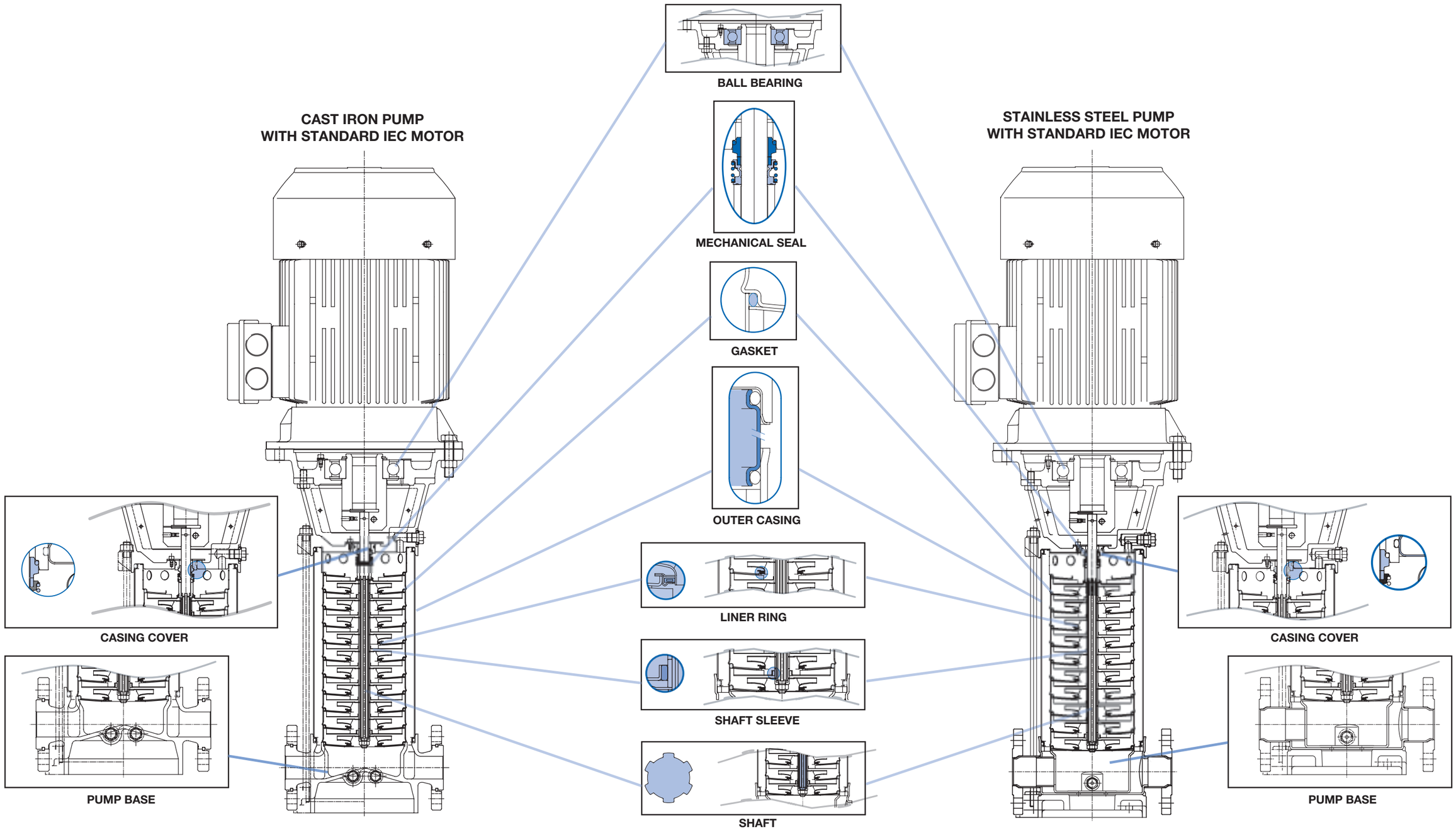

EVM VERTICAL MULTISTAGE CENTRIFUGAL PUMPS
IN CAST IRON - AISI 304 - AISI 316
EBARA TECHNOLOGY

EVM 32 TECHNICAL FEATURES

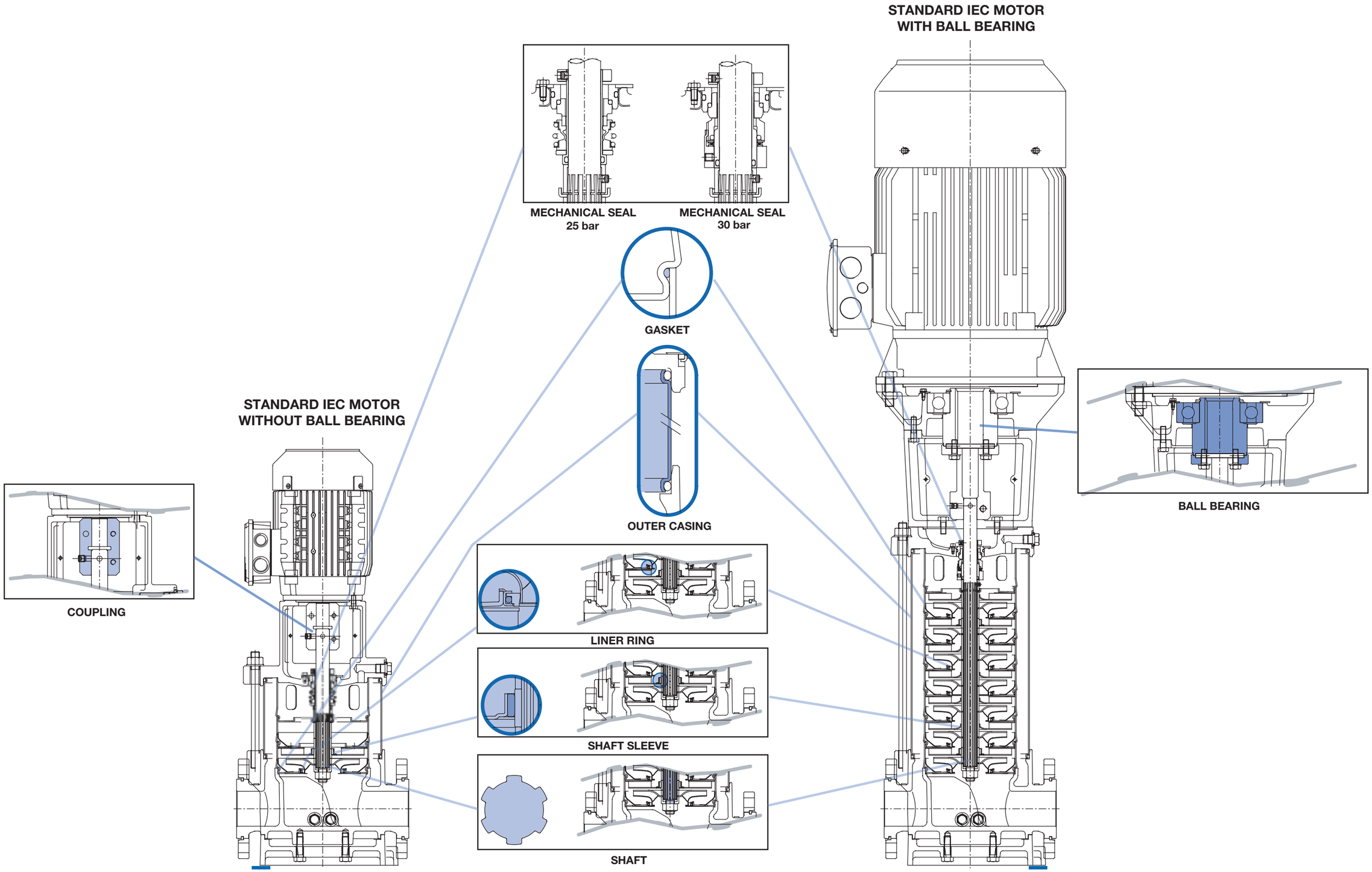

EVM VERTICAL MULTISTAGE CENTRIFUGAL PUMPS
IN CAST IRON - AISI 304 - AISI 316
EBARA TECHNOLOGY

EVM 45-64 TECHNICAL FEATURES

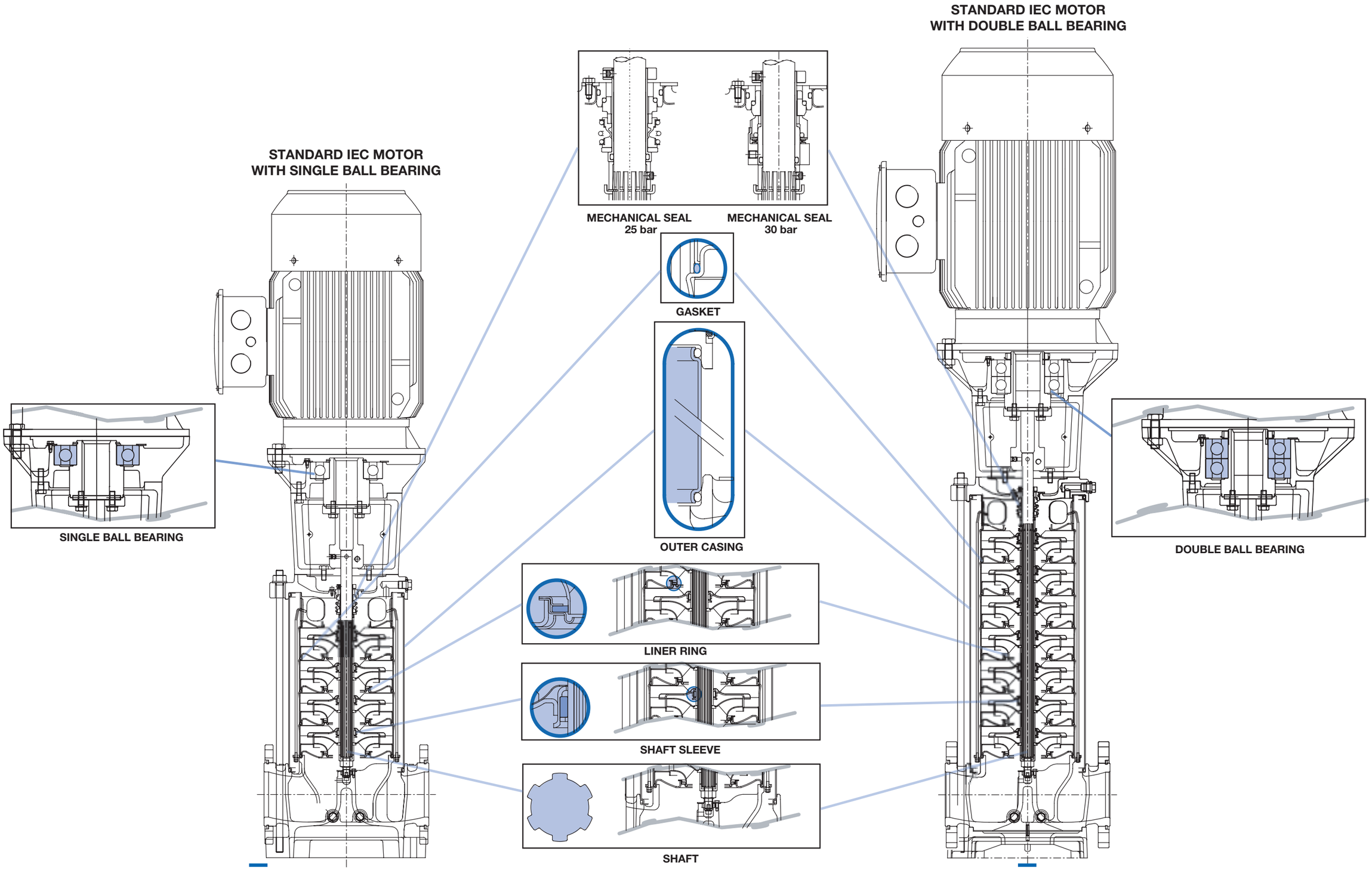

EVM 3

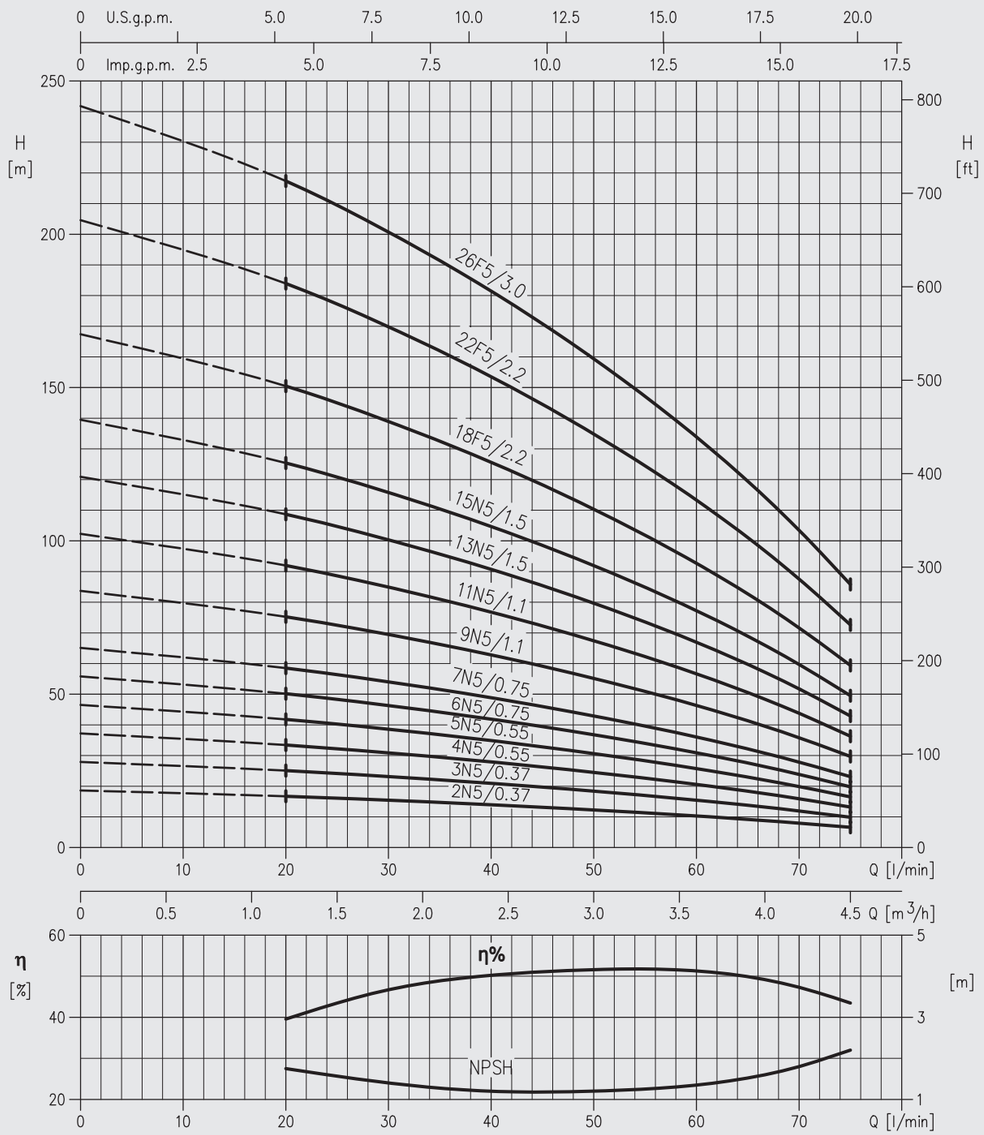

EVM
VERTICAL MULTISTAGE CENTRIFUGAL PUMPS
IN CAST IRON - AISI 304 - AISI 316
PERFORMANCE CURVES

EVM 5

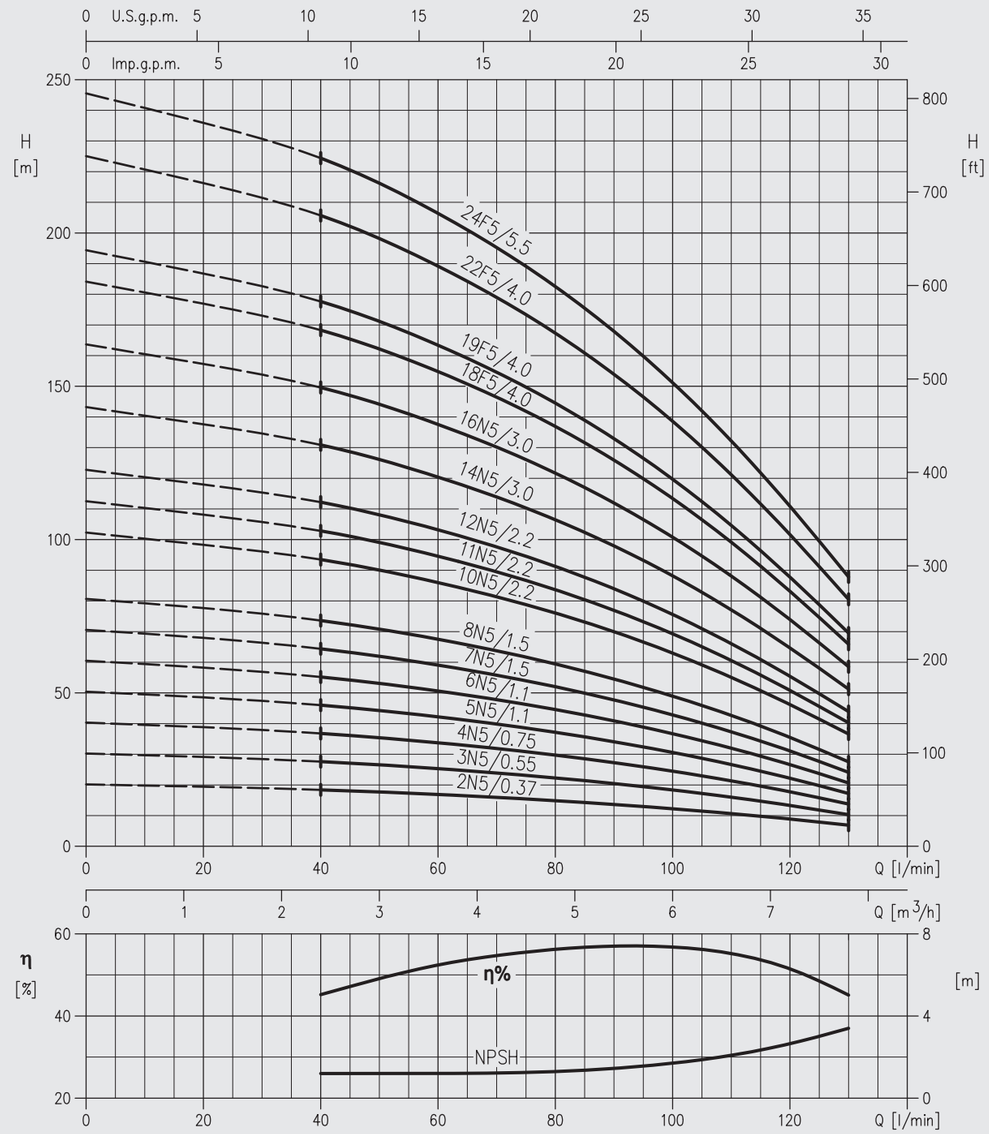

EVM 10

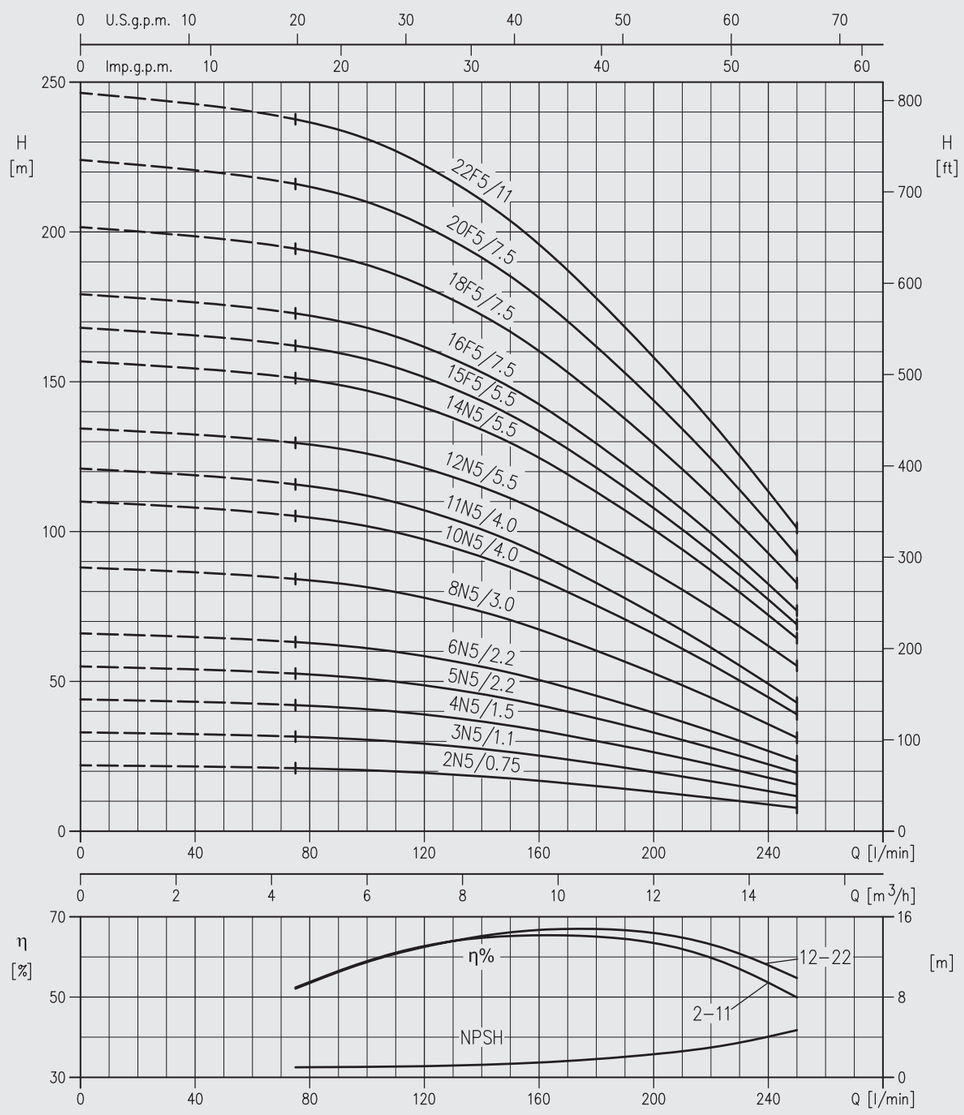

EVM
VERTICAL MULTISTAGE CENTRIFUGAL PUMPS
IN CAST IRON - AISI 304 - AISI 316
PERFORMANCE CURVES

EVM 18

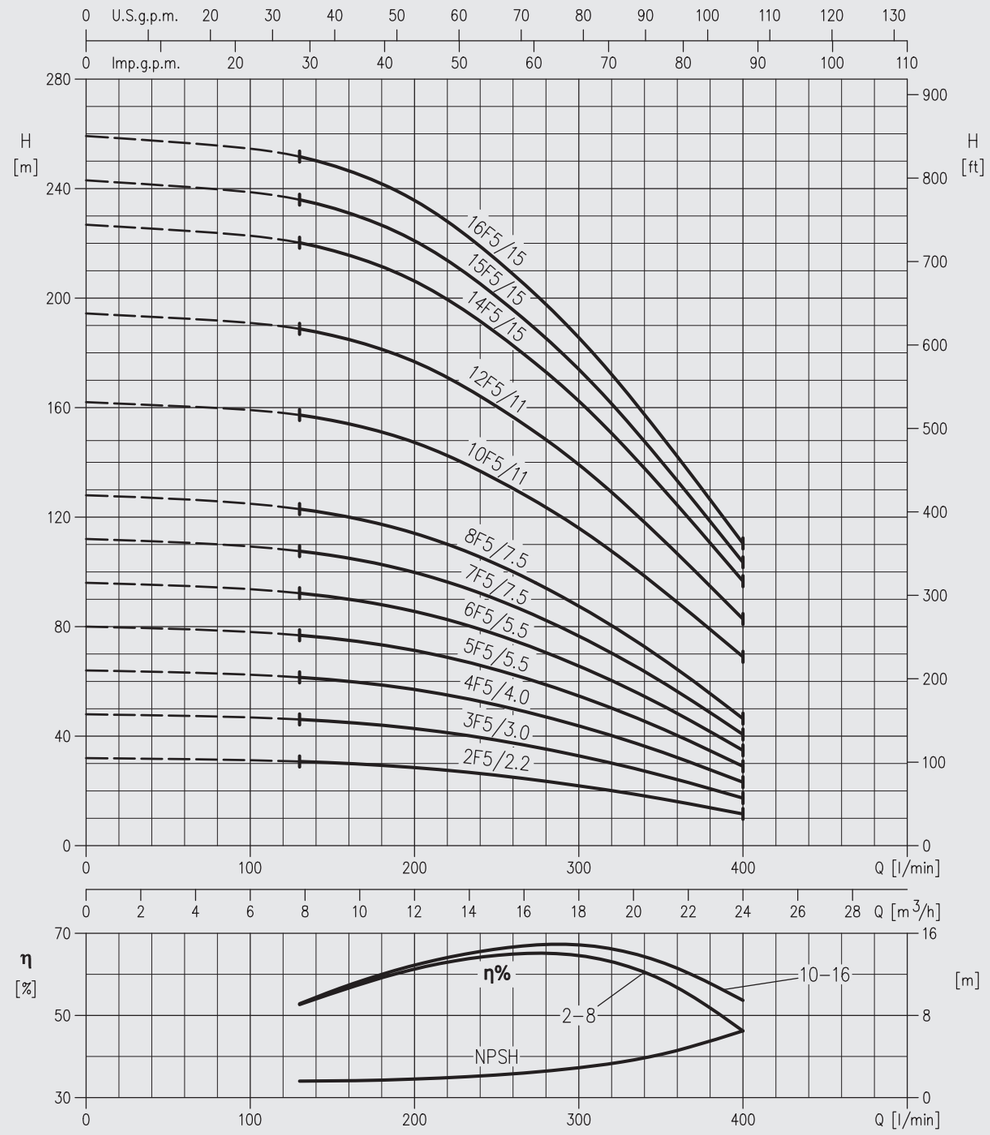

EVM 32

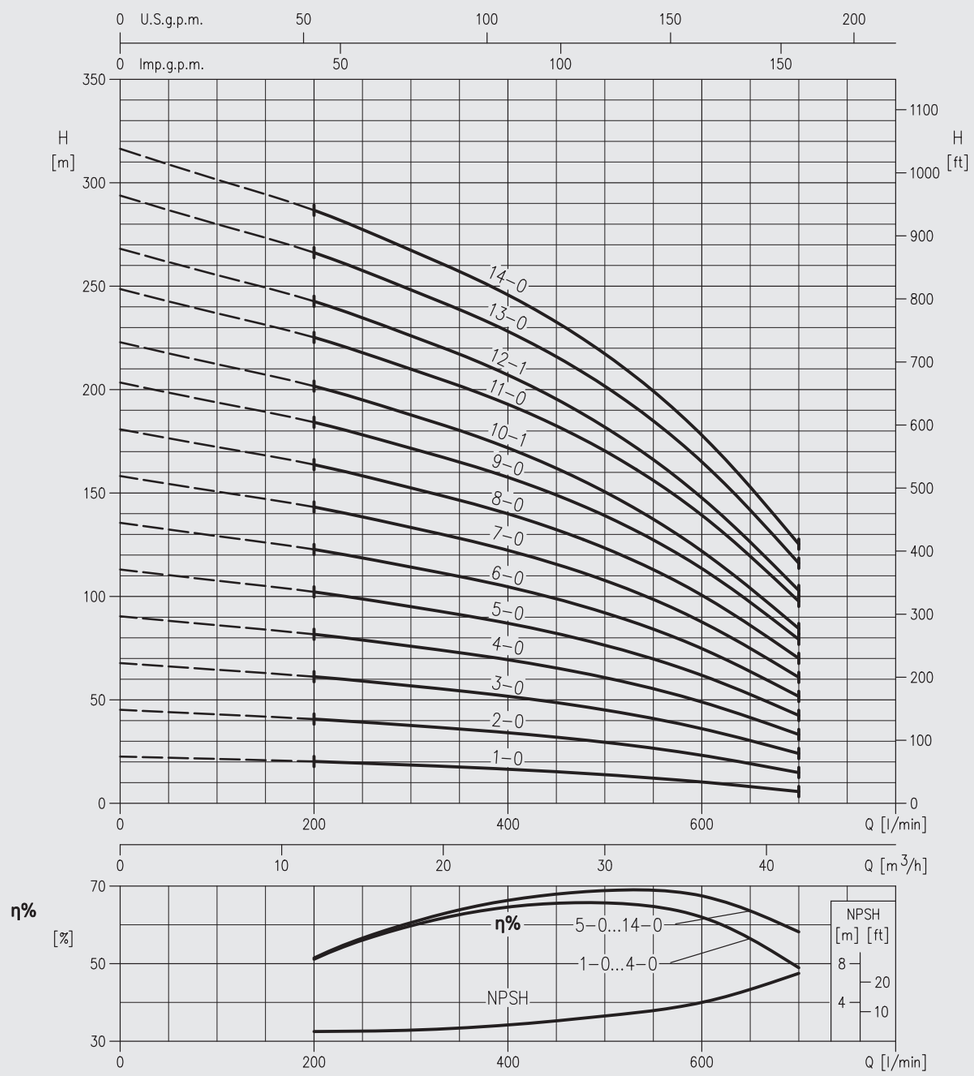

EVM
VERTICAL MULTISTAGE CENTRIFUGAL PUMPS
IN CAST IRON - AISI 304 - AISI 316
PERFORMANCE CURVES

EVM 32

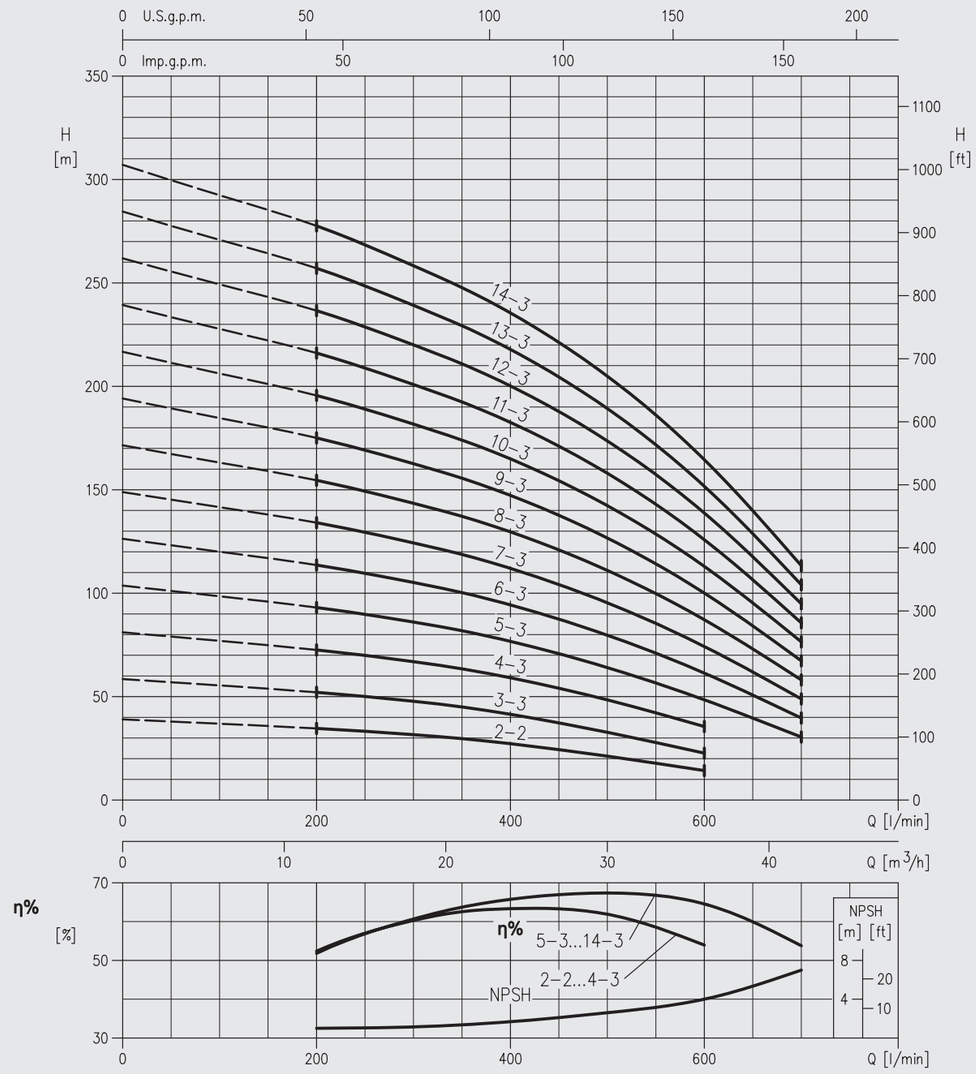

EVM 45

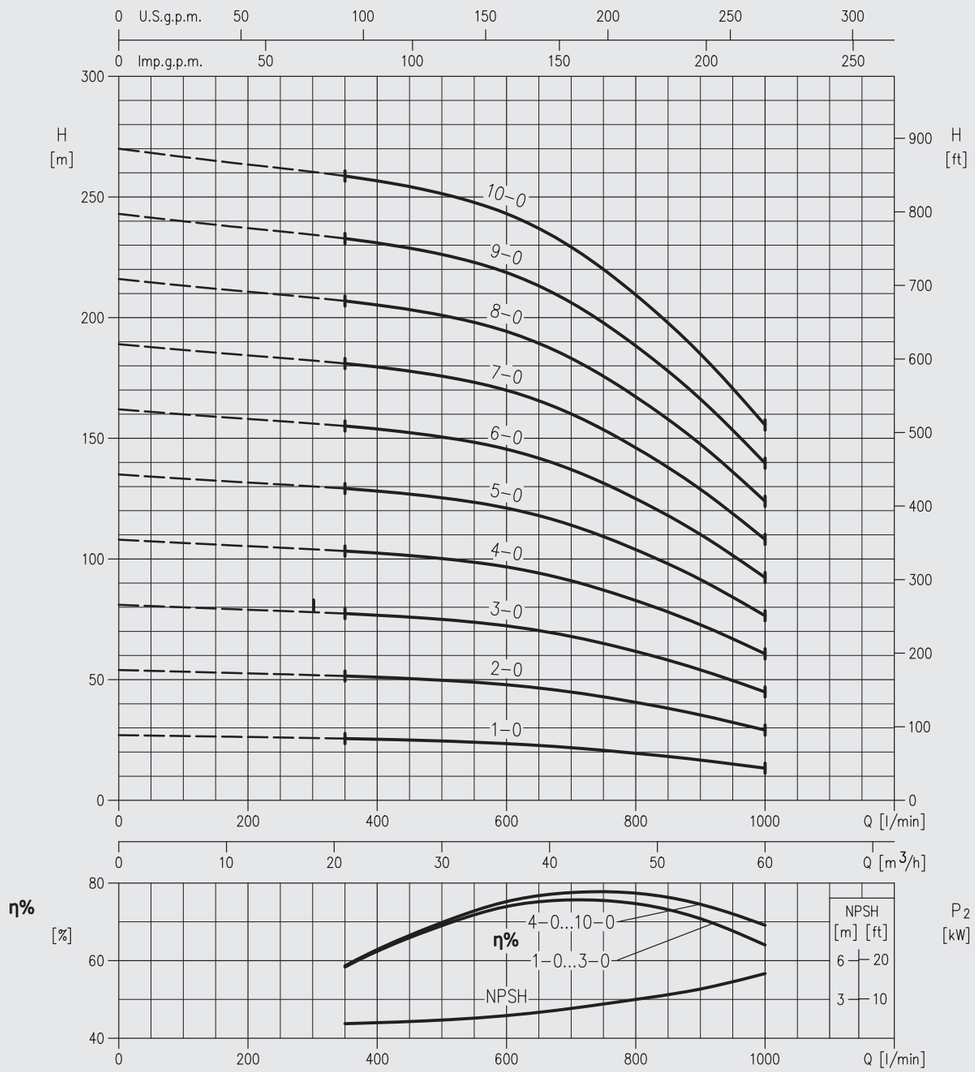

EVM
VERTICAL MULTISTAGE CENTRIFUGAL PUMPS
IN CAST IRON - AISI 304 - AISI 316
PERFORMANCE CURVES

EVM 45

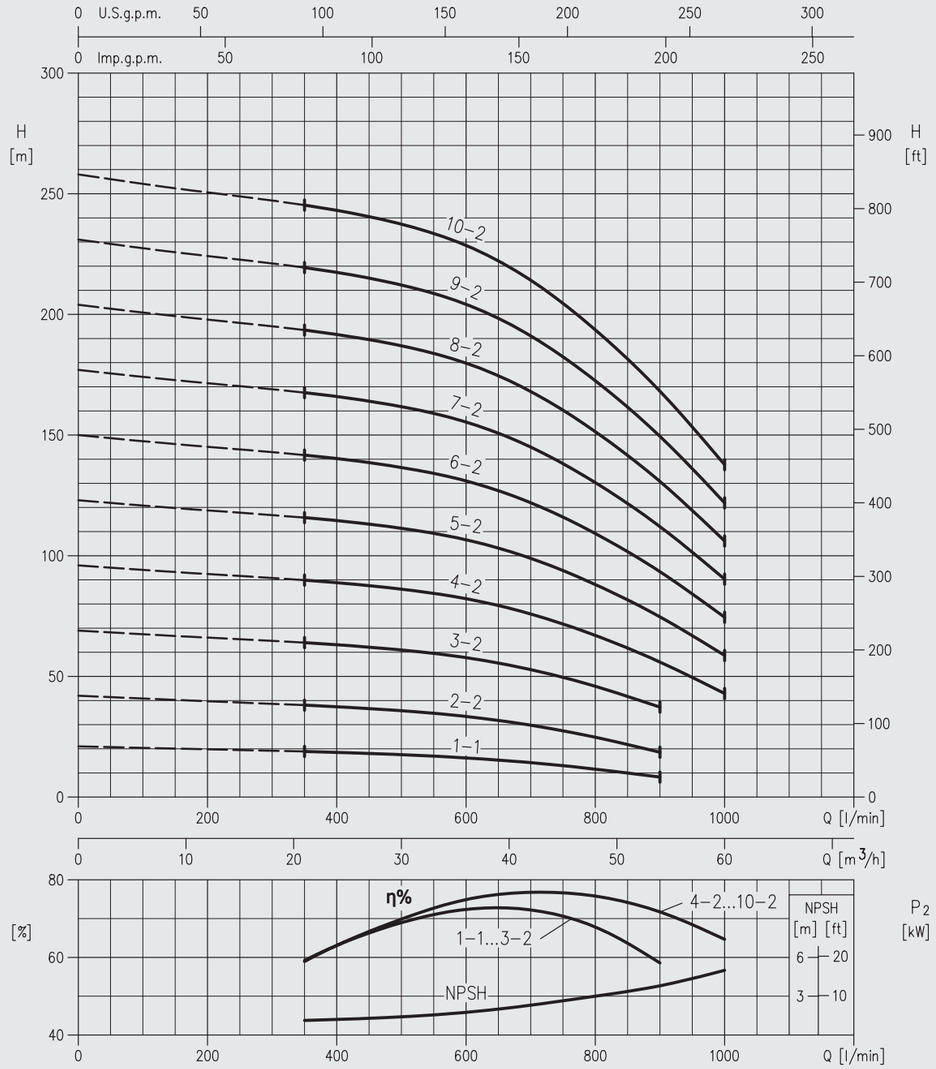

EVM 64

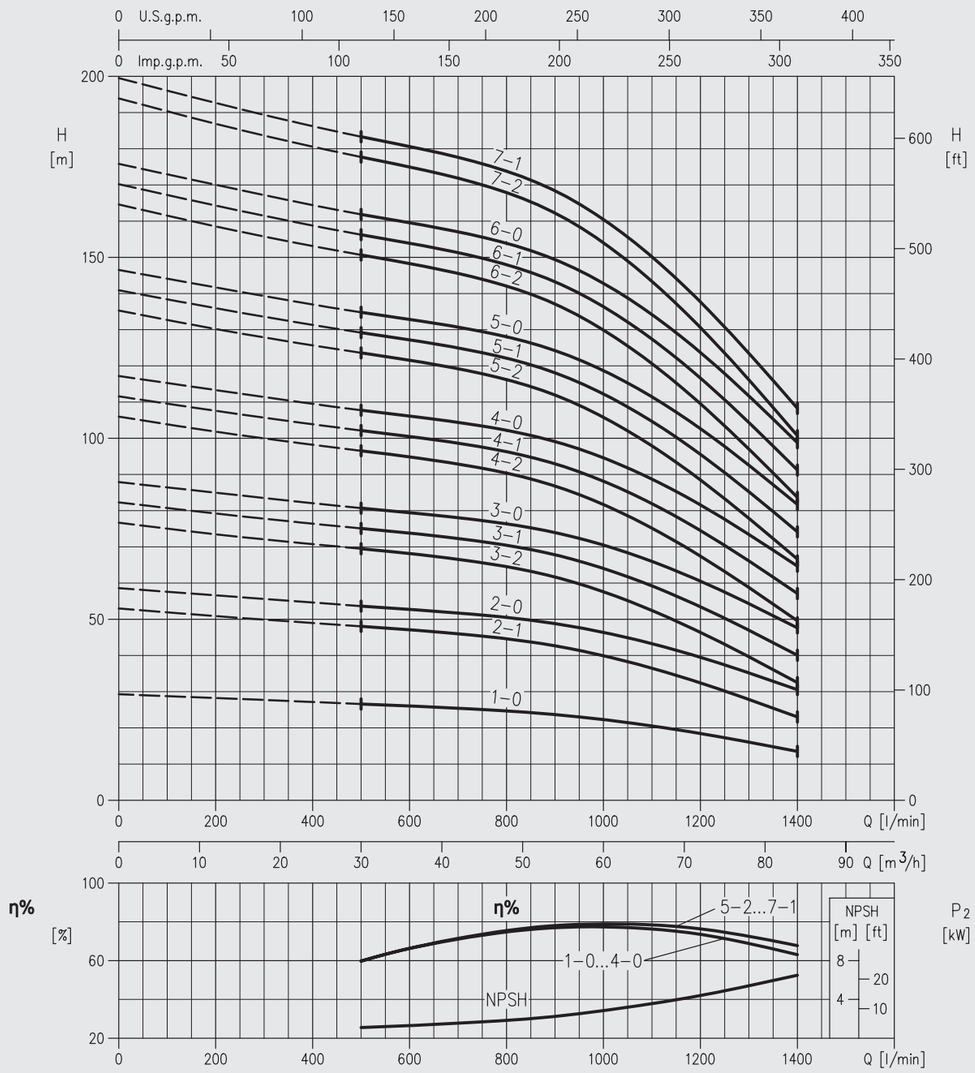

EVM
VERTICAL MULTISTAGE CENTRIFUGAL PUMPS
IN CAST IRON - AISI 304 - AISI 316
PERFORMANCE CURVES

EVM 64

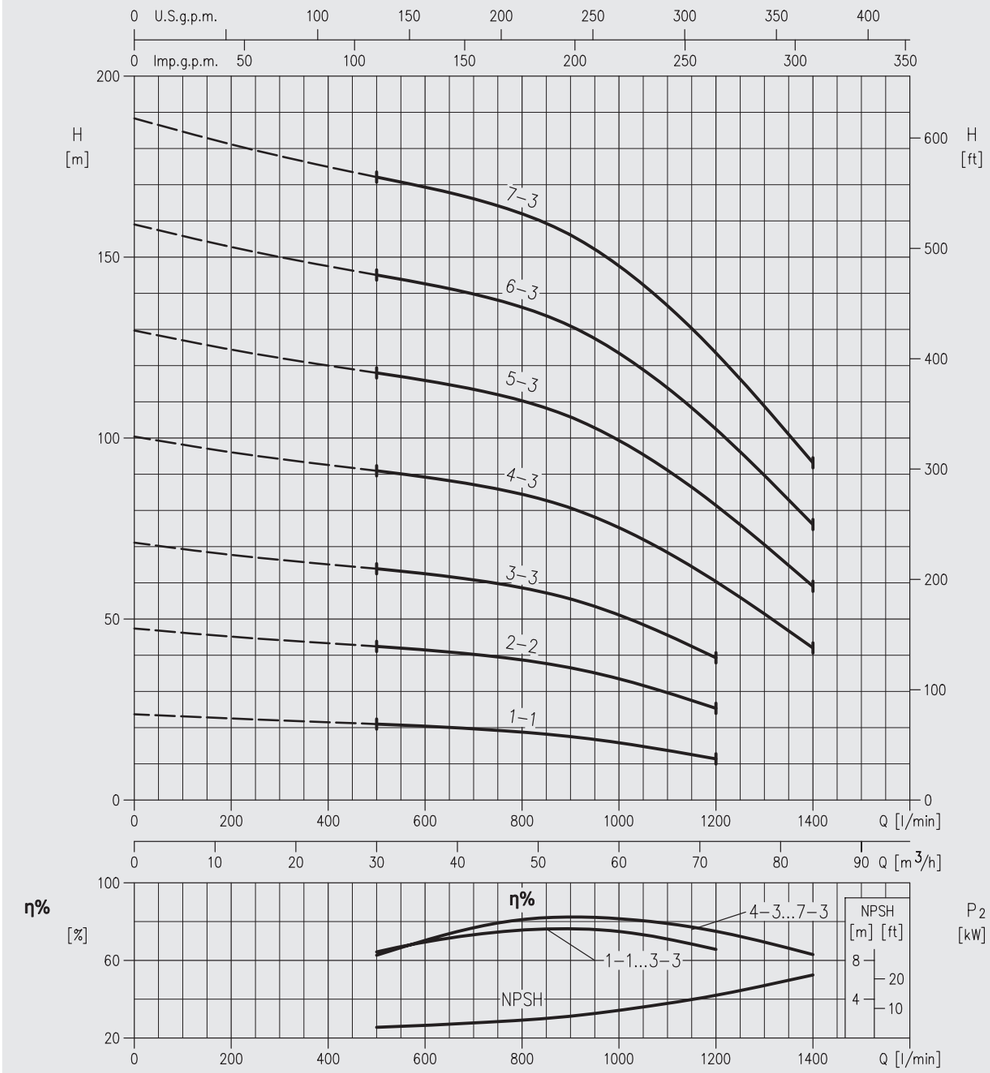

EVM 3-18

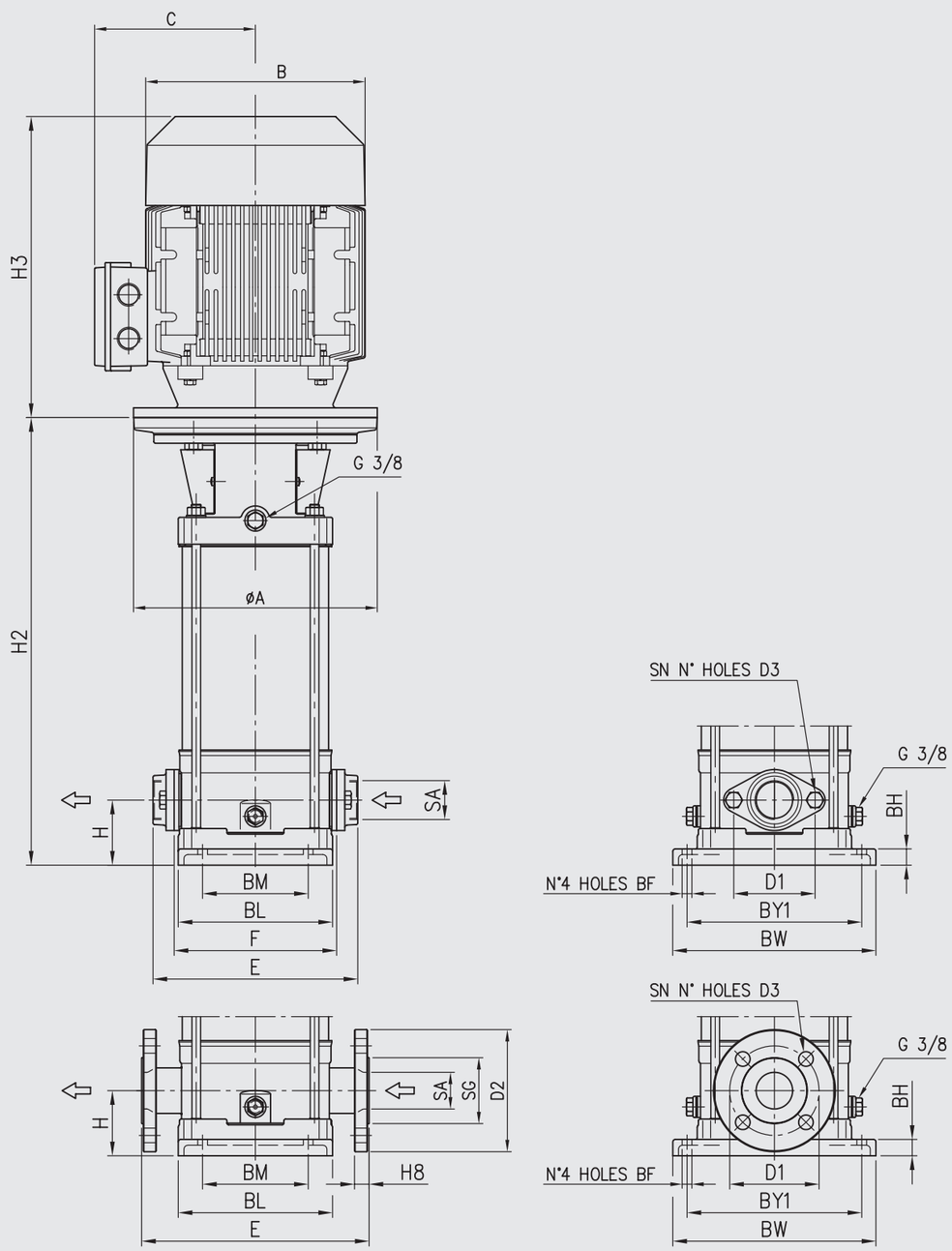

EVM
VERTICAL MULTISTAGE CENTRIFUGAL PUMPS
IN CAST IRON - AISI 304 - AISI 316
DIMENSIONS

EVM 3-18

Pump Type EVM	Pmax. [MPa]	Motor Size	Dimensions [mm]																								Weight [kg]		
			H	H2	H3		F	E	B		C		BM	BL	BY1	BW	SA	SG	D1	D2	H8	SN	D3	BF	BH	A	Pump	Pump + motor	
					1~	3~			1~	3~	1~	3~																1~	3~
EVM 3 2N5/0.37	1,6	71	50	241	215	215	160	206	142	142	129	112	100	149	180	210	G 1"	-	75	-	-	2	M10	Ø12	20	Ø105	11,3	17,0	17,0
EVM 3 3N5/0.37	1,6	71	50	262	215	215	160	206	142	142	129	112	100	149	180	210	G 1"	-	75	-	-	2	M10	Ø12	20	Ø105	11,8	17,5	17,5
EVM 3 4N5/0.55	1,6	71	50	283	215	215	160	206	142	142	129	112	100	149	180	210	G 1"	-	75	-	-	2	M10	Ø12	20	Ø105	12,3	19,3	18,6
EVM 3 5N5/0.55	1,6	71	50	304	215	215	160	206	142	142	129	112	100	149	180	210	G 1"	-	75	-	-	2	M10	Ø12	20	Ø105	12,8	19,8	19,1
EVM 3 6N5/0.75	1,6	80	50	335	232	232	160	206	160	160	150	129	100	149	180	210	G 1"	-	75	-	-	2	M10	Ø12	20	Ø120	13,7	25,1	22,1
EVM 3 7N5/0.75	1,6	80	50	356	232	232	160	206	160	160	150	129	100	149	180	210	G 1"	-	75	-	-	2	M10	Ø12	20	Ø120	13,9	25,3	22,3
EVM 3 9N5/1.1	1,6	80	50	398	232	232	160	206	160	160	150	129	100	149	180	210	G 1"	-	75	-	-	2	M10	Ø12	20	Ø120	14,8	26,6	24,3
EVM 3 11N5/1.1	1,6	80	50	440	232	232	160	206	160	160	150	129	100	149	180	210	G 1"	-	75	-	-	2	M10	Ø12	20	Ø120	16,2	28,0	25,7
EVM 3 13N5/1.5	1,6	90S	50	492	278	267	160	206	172	180	140	138	100	149	180	210	G 1"	-	75	-	-	2	M10	Ø12	20	Ø140	17,7	35,5	30,4
EVM 3 15N5/1.5	1,6	90S	50	534	278	267	160	206	172	180	140	138	100	149	180	210	G 1"	-	75	-	-	2	M10	Ø12	20	Ø140	19,2	37,0	31,9
EVM 3 18F5/2.2	2,5	90L	75	632	278	267	-	250	172	180	140	138	100	149	180	210	Ø25	Ø66	Ø85	Ø115	16	4	Ø14	Ø12	20	Ø140	24,8	44,3	40,8
EVM 3 22F5/2.2	2,5	90L	75	717	278	267	-	250	172	180	140	138	100	149	180	210	Ø25	Ø66	Ø85	Ø115	16	4	Ø14	Ø12	20	Ø140	27,2	46,7	43,2
EVM 3 26F5/3.0	2,5	100	75	811	-	306	-	250	-	196	-	145	100	149	180	210	Ø25	Ø66	Ø85	Ø115	16	4	Ø14	Ø12	20	Ø160	30,8	-	50,1
EVM 5 2N5/0.37	1,6	71	50	255	215	215	160	206	142	142	129	112	100	149	180	210	G 1"1/4	-	75	-	-	2	M10	Ø12	20	Ø105	11,5	17,2	17,2
EVM 5 3N5/0.55	1,6	71	50	283	215	215	160	206	142	142	129	112	100	149	180	210	G 1"1/4	-	75	-	-	2	M10	Ø12	20	Ø105	12,0	19,0	18,3
EVM 5 4N5/0.75	1,6	80	50	321	232	232	160	206	160	160	150	129	100	149	180	210	G 1"1/4	-	75	-	-	2	M10	Ø12	20	Ø120	12,9	24,3	21,3
EVM 5 5N5/1.1	1,6	80	50	349	232	232	160	206	160	160	150	129	100	149	180	210	G 1"1/4	-	75	-	-	2	M10	Ø12	20	Ø120	13,5	25,3	23,0
EVM 5 6N5/1.1	1,6	80	50	377	232	232	160	206	160	160	150	129	100	149	180	210	G 1"1/4	-	75	-	-	2	M10	Ø12	20	Ø120	14,1	25,9	23,6
EVM 5 7N5/1.5	1,6	90S	50	415	278	267	160	206	172	180	140	138	100	149	180	210	G 1"1/4	-	75	-	-	2	M10	Ø12	20	Ø140	14,9	32,7	27,6
EVM 5 8N5/1.5	1,6	90S	50	443	278	267	160	206	172	180	140	138	100	149	180	210	G 1"1/4	-	75	-	-	2	M10	Ø12	20	Ø140	15,5	33,3	28,2
EVM 5 10N5/2.2	1,6	90L	50	509	278	267	160	206	172	180	140	138	100	149	180	210	G 1"1/4	-	75	-	-	2	M10	Ø12	20	Ø140	17,9	37,4	33,9
EVM 5 11N5/2.2	1,6	90L	50	537	278	267	160	206	172	180	140	138	100	149	180	210	G 1"1/4	-	75	-	-	2	M10	Ø12	20	Ø140	19,0	38,5	35,0
EVM 5 12N5/2.2	1,6	90L	50	565	278	267	160	206	172	180	140	138	100	149	180	210	G 1"1/4	-	75	-	-	2	M10	Ø12	20	Ø140	19,7	39,2	35,7
EVM 5 14N5/3.0	1,6	100	50	631	-	306	160	206	-	196	-	145	100	149	180	210	G 1"1/4	-	75	-	-	2	M10	Ø12	20	Ø160	22,0	-	41,3
EVM 5 16N5/3.0	1,6	100	50	688	-	306	160	206	-	196	-	145	100	149	180	210	G 1"1/4	-	75	-	-	2	M10	Ø12	20	Ø160	23,3	-	42,6
EVM 5 18F5/4.0	2,5	112	75	769	-	306	-	250	-	196	-	145	100	149	180	210	Ø32	Ø76	Ø100	Ø140	20	4	Ø14	Ø12	20	Ø160	28,7	-	56,1
EVM 5 19F5/4.0	2,5	112	75	797	-	306	-	250	-	196	-	145	100	149	180	210	Ø32	Ø76	Ø100	Ø140	20	4	Ø14	Ø12	20	Ø160	29,4	-	56,8
EVM 5 22F5/4.0	2,5	112	75	881	-	306	-	250	-	196	-	145	100	149	180	210	Ø32	Ø76	Ø100	Ø140	20	4	Ø14	Ø12	20	Ø160	31,2	-	58,6
EVM 5 24F5/5.5	2,5	132S	75	948	-	370	-	250	-	270	-	198	100	149	180	210	Ø32	Ø76	Ø100	Ø140	20	4	Ø14	Ø12	20	Ø300	35,4	-	75,4
EVM 10 2N5/0.75	1,6	80	80	333	232	232	200	252	160	160	150	129	130	190	215	250	G 1"1/2	-	100	-	-	2	M12	Ø12	20	Ø120	18,0	29,4	26,4
EVM 10 3N5/1.1	1,6	80	80	363	232	232	200	252	160	160	150	129	130	190	215	250	G 1"1/2	-	100	-	-	2	M12	Ø12	20	Ø120	19,5	31,3	29,0
EVM 10 4N5/1.5	1,6	90S	80	403	278	267	200	252	172	180	140	138	130	190	215	250	G 1"1/2	-	100	-	-	2	M12	Ø12	20	Ø140	21,9	39,7	34,6
EVM 10 5N5/2.2	1,6	90L	80	443	278	267	200	252	172	180	140	138	130	190	215	250	G 1"1/2	-	100	-	-	2	M12	Ø12	20	Ø140	22,5	42,0	38,5
EVM 10 6N5/2.2	1,6	90L	80	473	278	267	200	252	172	180	140	138	130	190	215	250	G 1"1/2	-	100	-	-	2	M12	Ø12	20	Ø140	24,0	43,5	40,0
EVM 10 8N5/3.0	1,6	100	80	543	-	306	200	252	-	196	-	145	130	190	215	250	G 1"1/2	-	100	-	-	2	M12	Ø12	20	Ø160	30,6	-	49,9
EVM 10 10N5/4.0	1,6	112	80	603	-	306	200	252	-	196	-	145	130	190	215	250	G 1"1/2	-	100	-	-	2	M12	Ø12	20	Ø160	31,5	-	58,9
EVM 10 11N5/4.0	1,6	112	80	633	-	306	200	252	-	196	-	145	130	190	215	250	G 1"1/2	-	100	-	-	2	M12	Ø12	20	Ø160	34,0	-	61,4
EVM 10 12N5/5.5	1,6	132S	80	674	-	370	200	252	-	270	-	198	130	190	215	250	G 1"1/2	-	100	-	-	2	M12	Ø12	20	Ø300	39,3	-	79,3
EVM 10 14N5/5.5	1,6	132S	80	734	-	370	200	252	-	270	-	198	130	190	215	250	G 1"1/2	-	100	-	-	2	M12	Ø12	20	Ø300	41,8	-	81,8
EVM 10 15F5/5.5	2,5	132S	80	764	-	370	-	280	-	270	-	198	130	190	215	250	Ø40	Ø88	Ø110	Ø150	20	4	Ø18	Ø12	20	Ø300	45,8	-	85,8
EVM 10 16F5/7.5	2,5	132S	80	794	-	370	-	280	-	270	-	198	130	190	215	250	Ø40	Ø88	Ø110	Ø150	20	4	Ø18	Ø12	20	Ø300	47,8	-	92,8
EVM 10 18F5/7.5	2,5	132S	80	854	-	370	-	280	-	270	-	198	130	190	215	250	Ø40	Ø88	Ø110	Ø150	20	4	Ø18	Ø12	20	Ø300	49,8	-	94,8
EVM 10 20F5/7.5	2,5	132S	80	915	-	370	-	280	-	270	-	198	130	190	215	250	Ø40	Ø88	Ø110	Ø150	20	4	Ø18	Ø12	20	Ø300	49,8	-	94,8
EVM 10 22F5/11	2,5	160M	80	1005	-	503	-	280	-	335	-	246	130	190	215	250	Ø40	Ø88	Ø110	Ø150	20	4	Ø18	Ø12	20	Ø350	55,5	-	136,5
EVM 18 2F5/2.2	1,6	90L	90	373	278	267	-	300	172	180	140	138	130	190	215	250	Ø50	Ø102	Ø125	Ø165	20	4	Ø18	Ø12	20	Ø140	27,4	46,9	43,4
EVM 18 3F5/3.0	1,6	100	90	423	-	306	-	300	-	196	-	145	130	190	215	250	Ø50	Ø102	Ø125	Ø165	20	4	Ø18	Ø12	20	Ø160	28,9	28,9	48,2
EVM 18 4F5/4.0	1,6	112	90	473	-	306	-	300	-	196	-	145	130	190	215	250	Ø50	Ø102	Ø125	Ø165	20	4	Ø18	Ø12	20	Ø160	31,4	-	58,8
EVM 18 5F5/5.5	1,6	132S	90	524	-	370	-	300	-	270	-	198	130	190	215	250	Ø50	Ø102	Ø125	Ø165	20	4	Ø18	Ø12	20	Ø300	38,4	-	78,4
EVM 18 6F5/5.5	1,6	132S	90	564	-	370	-	300	-	270	-	198	130	190	215	250	Ø50	Ø102	Ø125	Ø165	20	4	Ø18	Ø12	20	Ø300	41,4	-	81,4
EVM 18 7F5/7.5	2,5	132S	90	604	-	370	-	300	-	270	-	198	130	190	215	250	Ø50	Ø102	Ø125	Ø165	20	4	Ø18	Ø12	20	Ø300	43,9	-	88,9
EVM 18 8F5/7.5	2,5	132S	90	644	-	370	-	300	-	270	-	198	130	190	215	250	Ø50	Ø102	Ø125	Ø165	20	4	Ø18	Ø12	20	Ø300	43,8	-	88,8
EVM 18 10F5/11	2,5	160M	90	754	-	503	-	300	-	335	-	246	130	190	215	250	Ø50	Ø102	Ø125	Ø165	20	4	Ø18	Ø12	20	Ø350	54,3	-	135,3
EVM 18 12F5/11	2,5	160M	90	834	-	503	-	300	-	335	-	246	130	190	215	250	Ø50	Ø102	Ø125	Ø165	20	4	Ø18	Ø12	20	Ø350	57,3	-	138,3
EVM 18 14F5/15	2,5	160M	90	914	-	503	-	300	-	335	-	246	130	190	215	250	Ø50	Ø102	Ø125	Ø165	20	4	Ø18	Ø12	20	Ø350	57,8	-	150,8
EVM 18 15F5/15	2,5	160M	90	955	-	503	-	300	-	335	-	246	130	190	215	250	Ø50	Ø102	Ø125	Ø165	20	4	Ø18	Ø12	20	Ø350	58,3	-	151,3
EVM 18 16F5/15	2,5	160M	90	995	-	503	-	300	-	335	-	246	130	190	215	250	Ø50	Ø102	Ø125	Ø165	20	4	Ø18	Ø12	20	Ø350	61,3	-	154,3

EVM 32-64

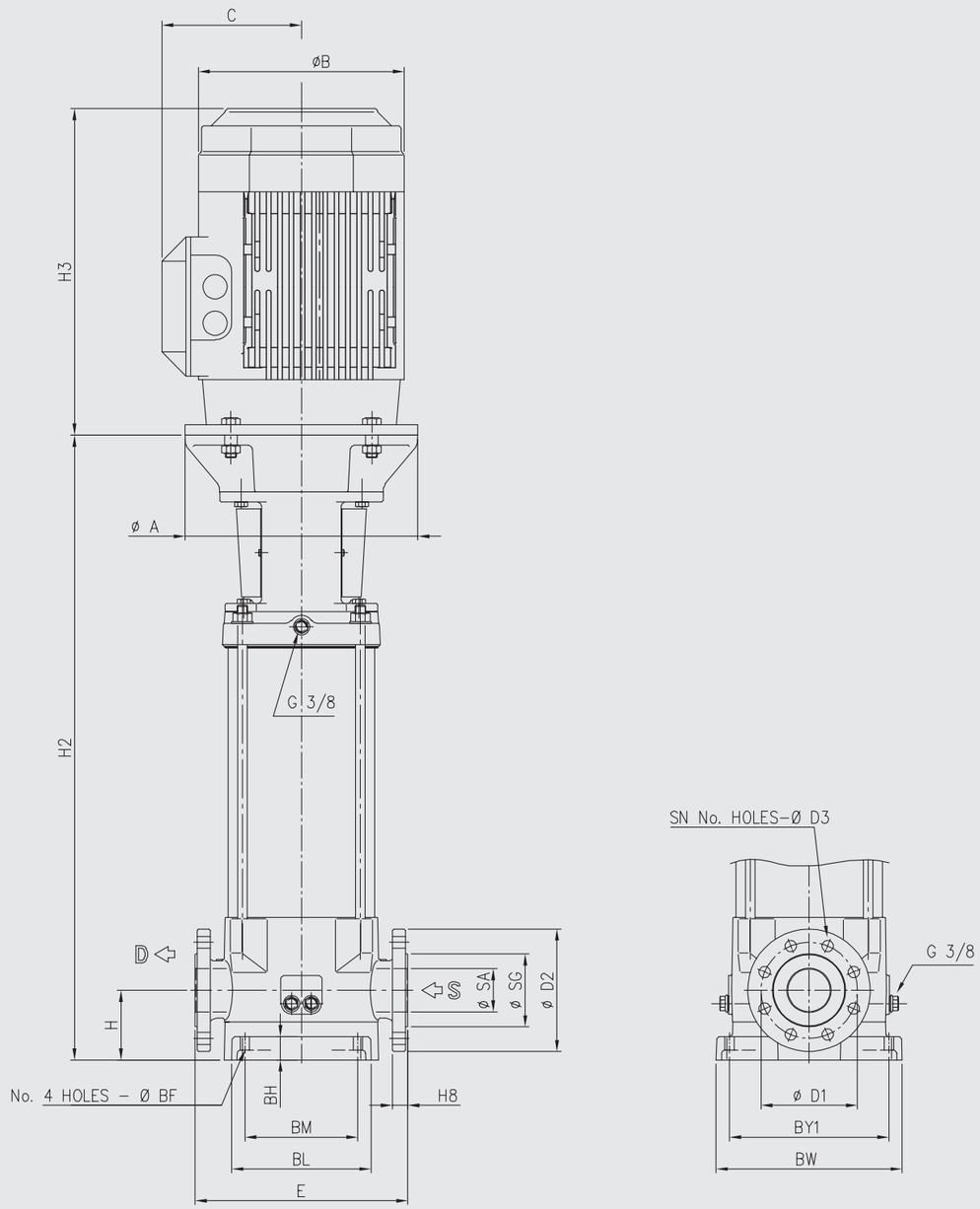

EVM
VERTICAL MULTISTAGE CENTRIFUGAL PUMPS
IN CAST IRON - AISI 304 - AISI 316
DIMENSIONS

EVM 32-45-64

Pump Type EVM	Pmax. [MPa]	Motor size	Dimensions [mm]																				Weight [kg]	
			H	H2	H3 3~	E	B 3~	C 3~	BM	BL	BY1	BW	SA	SG	D1	D2	H8	SN	D3	BF	BH	A	Pump	Pump + motor
32 1-0F5/2.2	1.6	90L	105	493	267	320	180	138	170	210	240	280	Ø65	Ø110	Ø145	Ø185	23	4	Ø18	Ø14	35	140	56	72
32 2-2F5/3.0	1.6	100	105	503	306	320	196	145	170	210	240	280	Ø65	Ø110	Ø145	Ø185	23	4	Ø18	Ø14	35	160	58	77.3
32 2-0F5/4.0	1.6	112	105	503	306	320	196	145	170	210	240	280	Ø65	Ø110	Ø145	Ø185	23	4	Ø18	Ø14	35	160	58	85.4
32 3-3F5/5.5	1.6	132S	105	572	370	320	270	198	170	210	240	280	Ø65	Ø110	Ø145	Ø185	23	4	Ø18	Ø14	35	300	74	114
32 3-0F5/5.5	1.6	132S	105	572	370	320	270	198	170	210	240	280	Ø65	Ø110	Ø145	Ø185	23	4	Ø18	Ø14	35	300	74	114
32 4-3F5/7.5	1.6	132S	105	620	370	320	270	198	170	210	240	280	Ø65	Ø110	Ø145	Ø185	23	4	Ø18	Ø14	35	300	77	122
32 4-0F5/7.5	1.6	132S	105	620	370	320	270	198	170	210	240	280	Ø65	Ø110	Ø145	Ø185	23	4	Ø18	Ø14	35	300	77	122
32 5-3F5/11	2.5	160M	105	799	503	320	335	246	170	210	240	280	Ø65	Ø110	Ø145	Ø185	23	4	Ø18	Ø14	35	350	96	177
32 5-0F5/11	2.5	160M	105	799	503	320	335	246	170	210	240	280	Ø65	Ø110	Ø145	Ø185	23	4	Ø18	Ø14	35	350	96	177
32 6-3F5/11	2.5	160M	105	847	503	320	335	246	170	210	240	280	Ø65	Ø110	Ø145	Ø185	23	4	Ø18	Ø14	35	350	99	180
32 6-0F5/11	2.5	160M	105	847	503	320	335	246	170	210	240	280	Ø65	Ø110	Ø145	Ø185	23	4	Ø18	Ø14	35	350	99	180
32 7-3F5/15	2.5	160M	105	895	503	320	335	246	170	210	240	280	Ø65	Ø110	Ø145	Ø185	23	4	Ø18	Ø14	35	350	102	195
32 7-0F5/15	2.5	160M	105	895	503	320	335	246	170	210	240	280	Ø65	Ø110	Ø145	Ø185	23	4	Ø18	Ø14	35	350	102	195
32 8-3F5/15	2.5	160M	105	943	503	320	335	246	170	210	240	280	Ø65	Ø110	Ø145	Ø185	23	8	Ø18	Ø14	35	350	105	198
32 8-0F5/15	2.5	160M	105	943	503	320	335	246	170	210	240	280	Ø65	Ø110	Ø145	Ø185	23	8	Ø18	Ø14	35	350	105	198
32 9-3F5/18.5	2.5	160L	105	991	547	320	335	246	170	210	240	280	Ø65	Ø110	Ø145	Ø185	23	8	Ø18	Ø14	35	350	108	209
32 9-0F5/18.5	2.5	160L	105	991	547	320	335	246	170	210	240	280	Ø65	Ø110	Ø145	Ø185	23	8	Ø18	Ø14	35	350	108	209
32 10-3F5/18.5	2.5	160L	105	1039	547	320	335	246	170	210	240	280	Ø65	Ø110	Ø145	Ø185	23	8	Ø18	Ø14	35	350	112	213
32 10-1F5/18.5	2.5	160L	105	1039	547	320	335	246	170	210	240	280	Ø65	Ø110	Ø145	Ø185	23	8	Ø18	Ø14	35	350	112	213
32 11-3F5/22	2.5	180	105	1087	602	320	366	266	170	210	240	280	Ø65	Ø110	Ø145	Ø185	23	8	Ø18	Ø14	35	350	116	246
32 11-0F5/22	2.5	180	105	1087	602	320	366	266	170	210	240	280	Ø65	Ø110	Ø145	Ø185	23	8	Ø18	Ø14	35	350	116	246
32 12-3F5/22	2.5	180	105	1135	602	320	366	266	170	210	240	280	Ø65	Ø110	Ø145	Ø185	23	8	Ø18	Ø14	35	350	119	249
32 12-1F5/22	3.0	180	105	1135	602	320	366	266	170	210	240	280	Ø65	Ø110	Ø145	Ø185	23	8	Ø18	Ø14	35	350	119	249
32 13-3F5/30	3.0	200	105	1198	669	320	405	341	170	210	240	280	Ø65	Ø110	Ø145	Ø185	23	8	Ø18	Ø14	35	400	129	301
32 13-0F5/30	3.0	200	105	1198	669	320	405	341	170	210	240	280	Ø65	Ø110	Ø145	Ø185	23	8	Ø18	Ø14	35	400	129	301
32 14-3F5/30	3.0	200	105	1246	669	320	405	341	170	210	240	280	Ø65	Ø110	Ø145	Ø185	23	8	Ø18	Ø14	35	400	133	305
32 14-0F5/30	3.0	200	105	1246	669	320	405	341	170	210	240	280	Ø65	Ø110	Ø145	Ø185	23	8	Ø18	Ø14	35	400	133	305
45 1-1F5/3.0	1.6	100	140	525	306	365	196	145	190	251	266	331	Ø80	Ø120	Ø160	Ø200	20	8	Ø18	Ø14	45	160	71	90.3
45 1-0F5/4.0	1.6	112	140	525	306	365	196	145	190	251	266	331	Ø80	Ø120	Ø160	Ø200	20	8	Ø18	Ø14	45	160	73	100.4
45 2-2F5/5.5	1.6	132S	140	618	370	365	270	198	190	251	266	331	Ø80	Ø120	Ø160	Ø200	20	8	Ø18	Ø14	45	300	81	121
45 2-0F5/7.5	1.6	132S	140	618	370	365	270	198	190	251	266	331	Ø80	Ø120	Ø160	Ø200	20	8	Ø18	Ø14	45	300	81	126
45 3-2F5/11	1.6	160M	140	821	503	365	335	246	190	251	266	331	Ø80	Ø120	Ø160	Ø200	20	8	Ø18	Ø14	45	350	99	180
45 3-0F5/11	1.6	160M	140	821	503	365	335	246	190	251	266	331	Ø80	Ø120	Ø160	Ø200	20	8	Ø18	Ø14	45	350	99	180
45 4-2F5/15	2.5	160M	140	893	503	365	335	246	190	251	266	331	Ø80	Ø120	Ø160	Ø200	20	8	Ø18	Ø14	45	350	108	189
45 4-0F5/15	2.5	160M	140	893	503	365	335	246	190	251	266	331	Ø80	Ø120	Ø160	Ø200	20	8	Ø18	Ø14	45	350	108	189
45 5-2F5/18.5	2.5	160L	140	965	547	365	335	246	190	251	266	331	Ø80	Ø120	Ø160	Ø200	20	8	Ø18	Ø14	45	350	128	229
45 5-0F5/18.5	2.5	160L	140	965	547	365	335	246	190	251	266	331	Ø80	Ø120	Ø160	Ø200	20	8	Ø18	Ø14	45	350	128	229
45 6-2F5/22	2.5	180	140	1037	602	365	366	266	190	251	266	331	Ø80	Ø120	Ø160	Ø200	20	8	Ø18	Ø14	45	350	133	263
45 6-0F5/22	2.5	180	140	1037	602	365	366	266	190	251	266	331	Ø80	Ø120	Ø160	Ø200	20	8	Ø18	Ø14	45	350	133	263
45 7-2F5/30	2.5	200	140	1124	669	365	405	341	190	251	266	331	Ø80	Ø120	Ø160	Ø200	20	8	Ø18	Ø14	45	400	139	311
45 7-0F5/30	2.5	200	140	1124	669	365	405	341	190	251	266	331	Ø80	Ø120	Ø160	Ø200	20	8	Ø18	Ø14	45	400	139	311
45 8-2F5/30	2.5	200	140	1196	669	365	405	341	190	251	266	331	Ø80	Ø120	Ø160	Ø200	20	8	Ø18	Ø14	45	400	146	318
45 8-0F5/30	2.5	200	140	1196	669	365	405	341	190	251	266	331	Ø80	Ø120	Ø160	Ø200	20	8	Ø18	Ø14	45	400	146	318
45 9-2F5/3.0	2.5	200	140	1269	669	365	405	341	190	251	266	331	Ø80	Ø120	Ø160	Ø200	20	8	Ø18	Ø14	45	400	151	323
45 9-0F5/37	2.5	200	140	1269	669	365	405	341	190	251	266	331	Ø80	Ø120	Ø160	Ø200	20	8	Ø18	Ø14	45	400	151	341
45 10-2F5/37	3.0	200	140	1341	669	365	405	341	190	251	266	331	Ø80	Ø120	Ø160	Ø200	20	8	Ø18	Ø14	45	400	156	346
45 10-0F5/37	3.0	200	140	1341	669	365	405	341	190	251	266	331	Ø80	Ø120	Ø160	Ø200	20	8	Ø18	Ø14	45	400	156	346
64 1-1F5/4.0	1.6	100	140	525	306	365	196	145	190	251	266	331	Ø100	Ø140	Ø180	Ø220	20	8	Ø18	Ø14	45	160	70.4	97.8
64 1-0F5/5.5	1.6	132	140	546	370	365	270	198	190	251	266	331	Ø100	Ø140	Ø180	Ø220	20	8	Ø18	Ø14	45	300	77	117
64 2-2F5/7.5	1.6	132	140	618	370	365	270	198	190	251	266	331	Ø100	Ø140	Ø180	Ø220	20	8	Ø18	Ø14	45	300	81.4	126.4
64 2-1F5/11	1.6	160M	140	749	503	365	335	246	190	251	266	331	Ø100	Ø140	Ø180	Ø220	20	8	Ø18	Ø14	45	350	93.5	174.5
64 2-0F5/11	1.6	160M	140	749	503	365	335	246	190	251	266	331	Ø100	Ø140	Ø180	Ø220	20	8	Ø18	Ø14	45	350	93.5	174.5
64 3-3F5/15	1.6	160M	140	821	503	365	335	246	190	251	266	331	Ø100	Ø140	Ø180	Ø220	20	8	Ø18	Ø14	45	350	99	192
64 3-2F5/15	1.6	160M	140	821	503	365	335	246	190	251	266	331	Ø100	Ø140	Ø180	Ø220	20	8	Ø18	Ø14	45	350	99	192
64 3-1F5/15	1.6	160M	140	821	503	365	335	246	190	251	266	331	Ø100	Ø140	Ø180	Ø220	20	8	Ø18	Ø14	45	350	99	192
64 3-0F5/18.5	1.6	160L	140	821	547	365	335	246	190	251	266	331	Ø100	Ø140	Ø180	Ø220	20	8	Ø18	Ø14	45	350	99	200
64 4-3F5/18.5	1.6	160L	140	893	547	365	335	246	190	251	266	331	Ø100	Ø140	Ø180	Ø220	20	8	Ø18	Ø14	45	350	108	209
64 4-2F5/18.5	1.6	160L	140	893	547	365	335	246	190	251	266	331	Ø100	Ø140	Ø180	Ø220	20	8	Ø18	Ø14	45	350	108	209
64 4-1F5/22	1.6	180	140	893	602	365	366	266	190	251	266	331	Ø100	Ø140	Ø180	Ø220	20	8	Ø18	Ø14	45	350	116	246
64 4-0F5/22	1.6	180	140	893	602	365	366	266	190	251	266	331	Ø100	Ø140	Ø180	Ø220	20	8	Ø18	Ø14	45	350	116	246
64 5-3F5/30	1.6	200	140	980	669	365	405	341	190	251	266	331	Ø100	Ø140	Ø180	Ø220	20	8	Ø18	Ø14	45	400	128	300
64 5-2F5/30	1.6	200	140	980	669	365	405	341	190	251	266	331	Ø100	Ø140	Ø180	Ø220	20	8	Ø18	Ø14	45	400	128	300
64 5-1F5/30	1.6	200	140	980	669	365	405	341	190	251	266	331	Ø100	Ø140	Ø180	Ø220	20	8	Ø18	Ø14	45	400	128	300
64 5-0F5/30	1.6	200	140	980	669	365	405	341	190	251	266	331	Ø100	Ø140	Ø180	Ø220	20	8	Ø18	Ø14	45	400	128	300
64 6-3F5/30	1.6	200	140	1052	669	365	405	341	190	251	266	331	Ø100	Ø140	Ø180	Ø220	20	8	Ø18	Ø14	45	400	136	308
64 6-2F5/30	2.5	200	140	1052	669	365	405	341	190	251	266	331	Ø100	Ø140	Ø190	Ø235	26	8	Ø22	Ø14	45	400	136	308
64 6-1F5/37	2.5	200	140	1052	669	365	405	341	190	251	266	331	Ø100	Ø140	Ø190	Ø235	26	8	Ø22	Ø14	45	400	136	326
64 6-0F5/37	2.5	200	140	1052	669	365	405	341	190	251	266	331	Ø100	Ø140	Ø190	Ø235	26	8	Ø22	Ø14	45	400	136	326
64 7-3F5/37	2.5	200	140	1124	669	365	405	341	190	251	266	331	Ø100	Ø140	Ø190	Ø235	26	8	Ø22	Ø14	45	400	139	329
64 7-2F5/37	2.5	200	140	1124	669	365	405	341	190	251	266	331	Ø100	Ø140	Ø190	Ø235	26	8	Ø22	Ø14	45	400	139	329
64 7-1F5/37	2.5	200	140	1124	669	365	405	341	190	251	266	331	Ø100	Ø140	Ø190	Ø235	26	8	Ø22	Ø14	45	400	139	329

Shaft seals are used like a barrier in pumps in order to avoid that the pumped liquid can damage the motor, and guarantee the optimization of the results in terms of durability, reliability and replaceability.
The most important features on the strength of the choice of shaft seal has to be done are:
• the liquid properties
• the chemical, thermal and mechanical impacts.
On request a special mechanical shaft seal is suitable for different types of fluids.

EVM 3-18

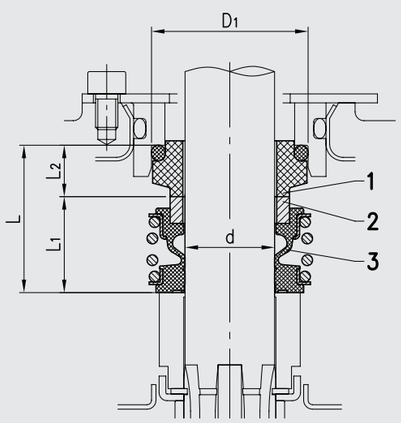

EVM 32-64

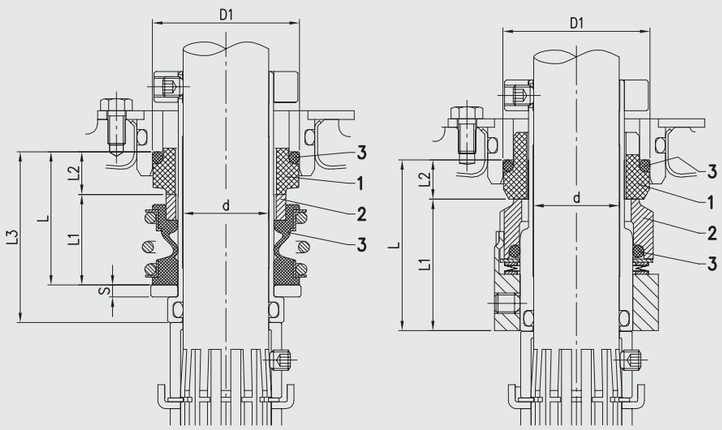

Up to 2.5 MPa

From 2.5 to 3.0 MPa

Pump Type EVM	Size [mm]	Max.working pressure [MPa]	Material Description	d [mm]	D_1 [mm]	L [mm]	L_1 [mm]	L_2 [mm]	L_3 [mm]	S [mm]	Material 1 stationary seal ring	Material 2 rotary seal ring	Material 3 rubber
EVM 3-5	12,7	1,6	Q1BVGG	12,7	23	23,5	16	7,5	-	-	Carbon graphite	Silicon carbide	FPM (EPDM WRAS approved for EWMW)
		2,5											
EVM 10	16	1,6		16	27	27	17	10	-	-			
		2,5											
EVM 18	20	1,6		20	35	33	21,5	11,5	-	-			
		2,5											
EVM 32-45-64	25	2,5		25	43	39	26,5	12,5	50	3,5			FPM
		3				50	38,5	11,5	-	-			

EVM
VERTICAL MULTISTAGE CENTRIFUGAL PUMPS
IN CAST IRON - AISI 304 - AISI 316
MECHANICAL SHAFT SEAL

CARTRIDGE SHAFT SEAL

EVM 32-45-64 pumps mount the carridge shaft seal
All components of a cartridge shaft seal constitute a sole part on a shaft sleeve. The cartridge mechanical seal is ready to be installed between pump shaft and motor shaft. The most important benefits of this kind of seal are:
• Easy to install
• Protected seal faces
• Safe and easy handling

We are at disposal for evaluating your specifications and needs in order to find the best solution for your plants and applications.

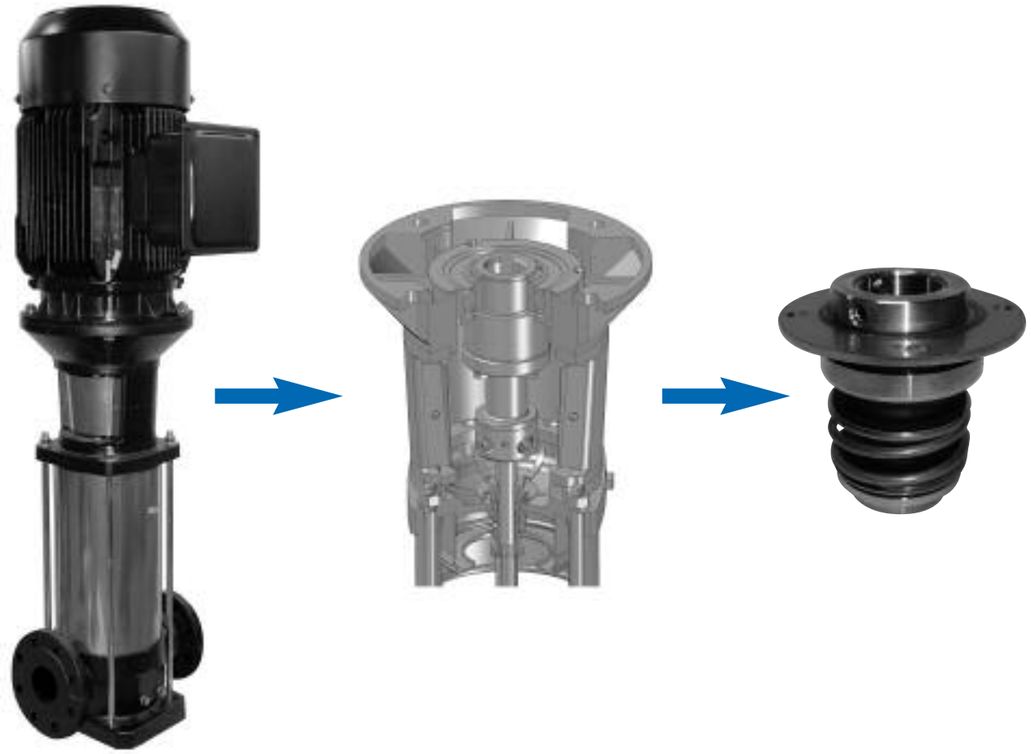

CARTRIDGE MECHANICAL SEAL FOR EVM 32-45-64

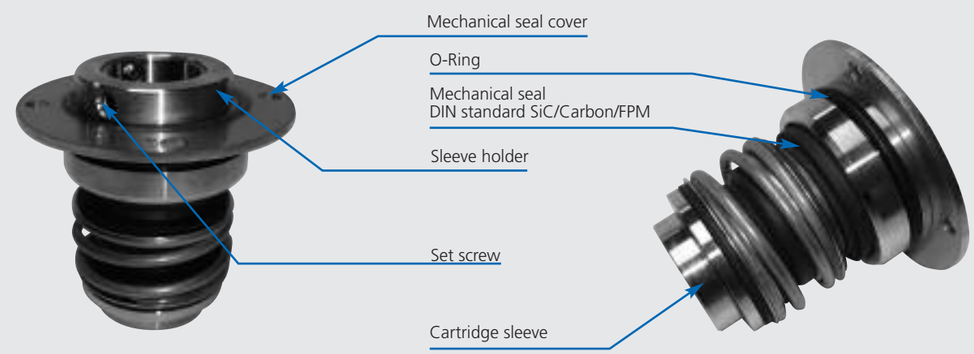

EVM 3-18 Pump without ball bearing

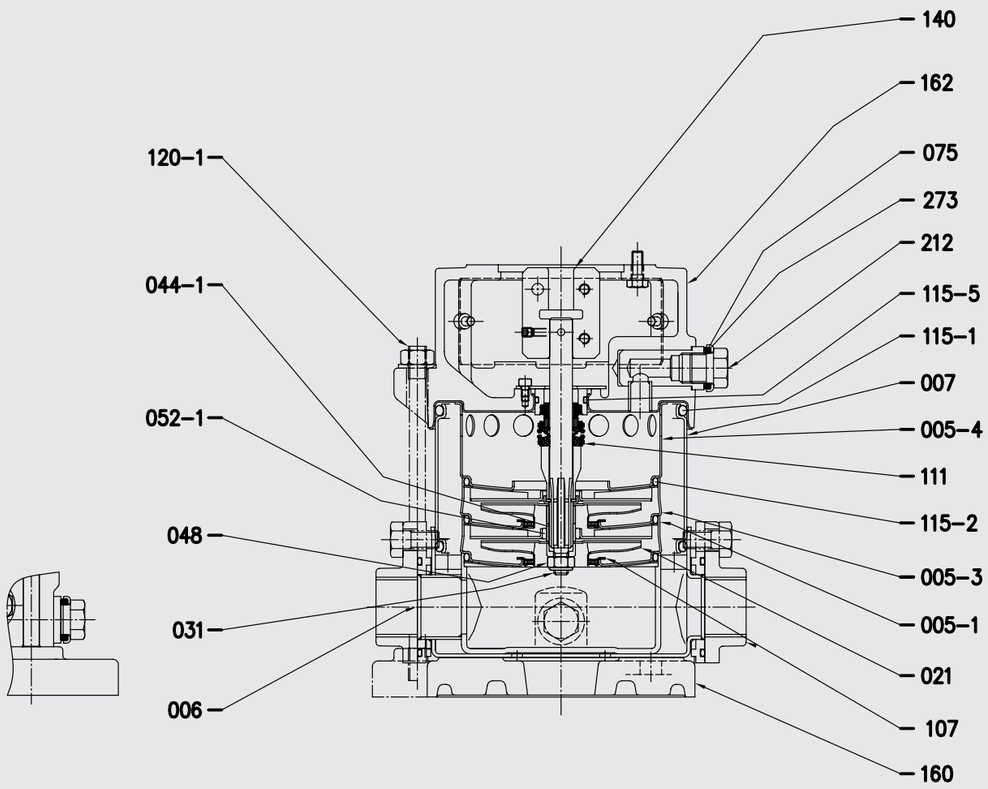

EVM
VERTICAL MULTISTAGE CENTRIFUGAL PUMPS
IN CAST IRON - AISI 304 - AISI 316
CONSTRUCTIONS

EVM 3-18 Pump with single ball bearing

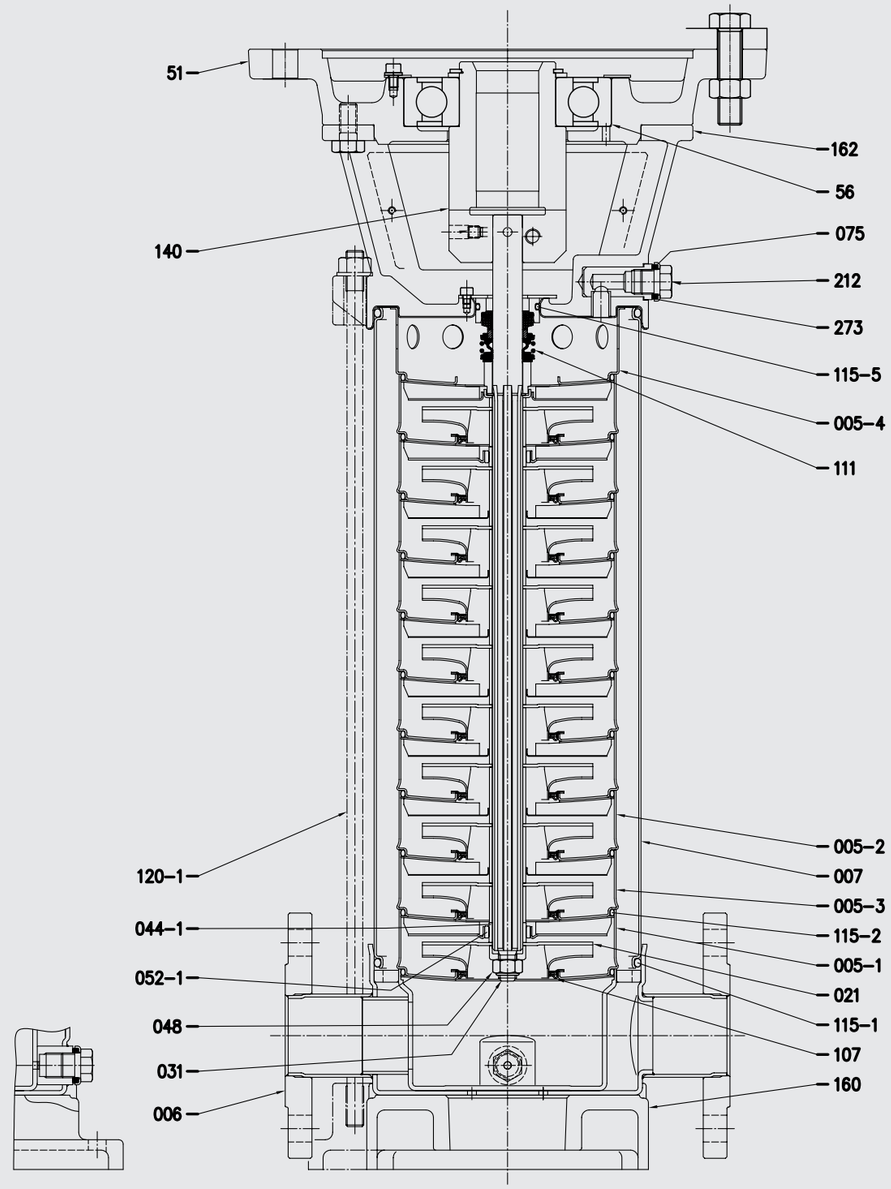

EVM 3-18

N°	Part name	Material			
		EVMG	EVM	EVML	EWMW
005-1	Suction casing	EN 1.4301(AISI 304)		EN 1.4401 (AISI 316)	EN 1.4301(AISI 304)
005-2	Intermediate casing	EN 1.4301(AISI 304)		EN 1.4401 (AISI 316)	EN 1.4301(AISI 304)
005-3	Intermediate casing bearing	EN 1.4301(AISI 304)		EN 1.4401 (AISI 316)	EN 1.4301(AISI 304)
005-4	Discharge casing	EN 1.4301(AISI 304)		EN 1.4401 (AISI 316)	EN 1.4301(AISI 304)
006	Bottom casing	Cast iron EN-GJL-200-EN 1561	EN 1.4301(AISI 304)	EN 1.4401 (AISI 316)	EN 1.4301(AISI 304)
007	Outer casing	EN 1.4401 (AISI 316)			
021	Impeller	EN 1.4301(AISI 304)		EN 1.4401 (AISI 316)	EN 1.4301(AISI 304)
031	Shaft	EN 1.4401 (AISI 316)			
044-1	Shaft sleeve bearing	Tungsten carbide			
048	Impeller nut	A2-70 UNI 7323 with inox insert		A4-70 UNI 7323 with inox insert	A2-70 UNI 7323 with inox insert
051	Motor adapter	Cast iron EN-GJL-200-EN 1561			
052-1	Bearing	Tungsten carbide			
056	Ball bearing	-			
075	O-Ring (plug)	EPDM		FPM	EPDM-WRAS
107	Liner ring	EPDM/EN 1.4301(AISI 304)		PTFE/EN 1.4401 (AISI 316)	EPDM-WRAS /EN 1.4301(AISI 304)
111	Mechanical seal	Silicon carbide/Carbon/FPM			Silicon carbide /Carbon/EPDM-WRAS
115	O-ring (outer casing)	EPDM		FPM	EPDM-WRAS
	O-ring (intermediate casing)	EPDM		FPM	EPDM-WRAS
	O-ring	EPDM		FPM	EPDM-WRAS
120-1	Tie rod	Zincate steel 6.8 strenght class ISO 898/1			
140	Coupling	Brass OT 58 UNI 5705			
160	Base	-	Cast iron EN-GJL-200-EN 1561		
162	Motor bracket	Cast iron EN-GJL-200-EN 1561			
212	Plug	EN 1.4301(AISI 304)		EN 1.4401 (AISI 316)	EN 1.4301(AISI 304)
273	Washer (plug)	EN 1.4301(AISI 304)		EN 1.4401 (AISI 316)	EN 1.4301(AISI 304)

EVM 32 Pump without ball bearing

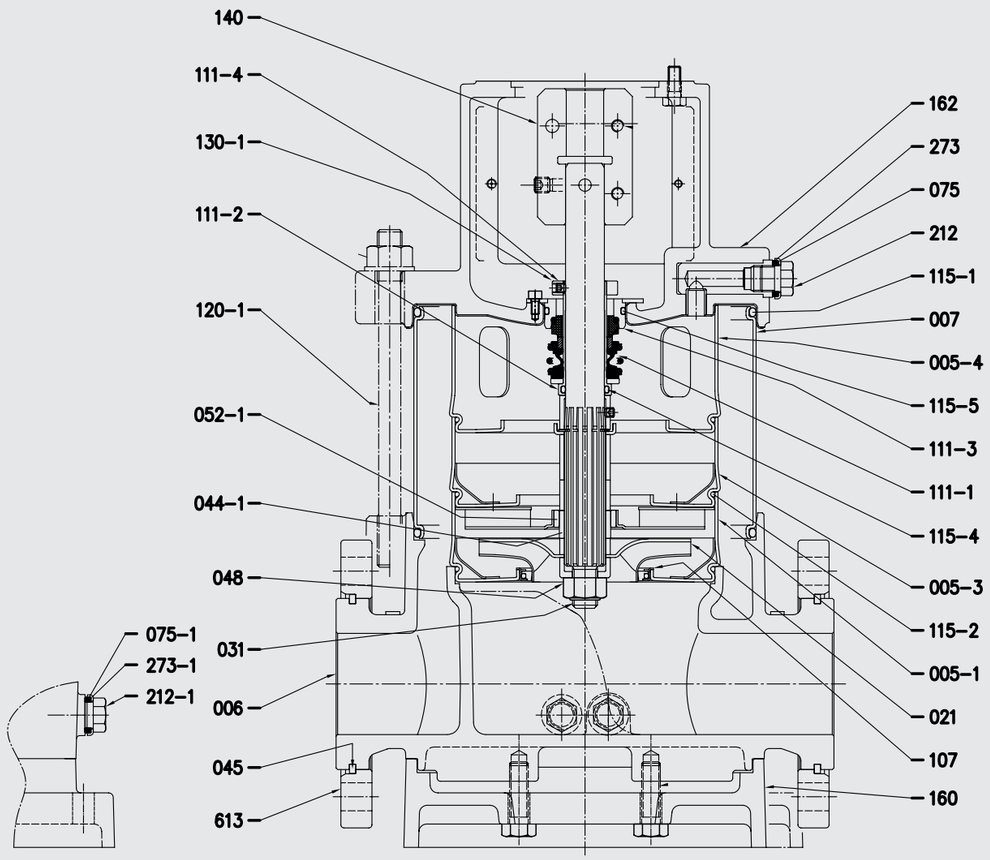

EVM 32 Pump with single ball bearing

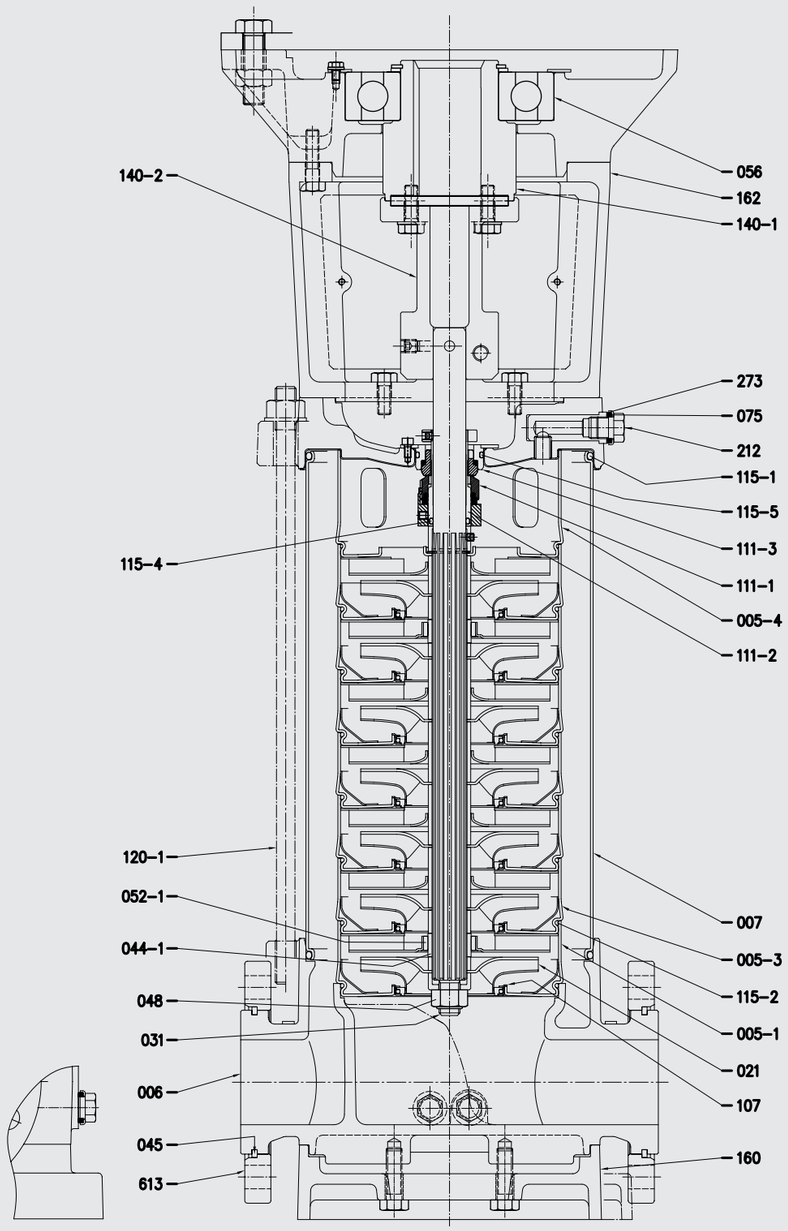

EVM
VERTICAL MULTISTAGE CENTRIFUGAL PUMPS
IN CAST IRON - AISI 304 - AISI 316
CONSTRUCTIONS

EVM 32

N°	Part name	Material		
		EVMG	EVM	EVML
005-1	Suction casing	EN 1.4301 (AISI 304)		EN 1.4401 (AISI 316)
005-3	Intermediate casing bearing	EN 1.4301 (AISI 304)		EN 1.4401 (AISI 316)
005-4	Discharge casing	EN 1.4301 (AISI 304)		EN 1.4401 (AISI 316)
006	Bottom casing	Cast iron EN GJL-250-EN1561	EN 1.4308 (ASTM CF8)	EN 1.4408 (ASTM CF8M)
007	Outer casing	EN 1.4301 (AISI 304)		EN 1.4401 (AISI 316)
021	Impeller	EN 1.4301 (AISI 304)		EN 1.4401 (AISI 316)
031	Shaft	EN 1.4401 (AISI 316)		
044-1	Shaft sleeve bearing	Tungsten carbide		
045	Flange holder	EN 1.402 (AISI 420)		
048	Impeller nut	A2-70 UNI 7323 with inox insert		A4-70 UNI 7323 with inox insert
052-1	Bearing	Tungsten carbide		
056	Ball bearing	-		
075	O-Ring (plug)	EPDM		FPM
107	Liner ring	EPDM/ EN 1.4301 (AISI 304)		PTFE / EN 1.4401 (AISI 316)
111-1	Mechanical seal	Silicon carbide / Carbon / FPM		
111-2	Mechanical seal cartridge	EN 1.4301 (AISI 304)		EN 1.4401 (AISI 316)
111-3	Mechanical seal seat	EN 1.4301 (AISI 304)		EN 1.4401 (AISI 316)
111-4	Seal holder	Brass OT 58 UNI 5705		EN 1.4401 (AISI 316)
115	O-Ring (outer casing)	EPDM		FPM
	O-Ring (intermediate casing)	EPDM		FPM
	O-Ring (cartridge sleeve)	EPDM		FPM
	O-Ring (seal cover)	EPDM		FPM
120-1	Tie-rod	Zincate steel 6.8 strenght class ISO 898/1		
130-1	Set screw	A2-70 UNI 7323		
140	Coupling	Brass OT 58 UNI 5705		
140-1	Motor coupling	Carbon steel		
140-2	Coupling (motor side)	Carbon steel		
160	Base	-	Cast iron EN-GJL-200-EN 1561	
162	Motor bracket	Cast iron RN-GJL-200-EN 1561		
212	Plug	EN 1.4301 (AISI 304)		EN 1.4401 (AISI 316)
273	Plug washer	EN 1.4301 (AISI 304)		EN 1.4401 (AISI 316)
613	Flange	Carbon steel	-	-

EVM 45-64 Pump with single ball bearing

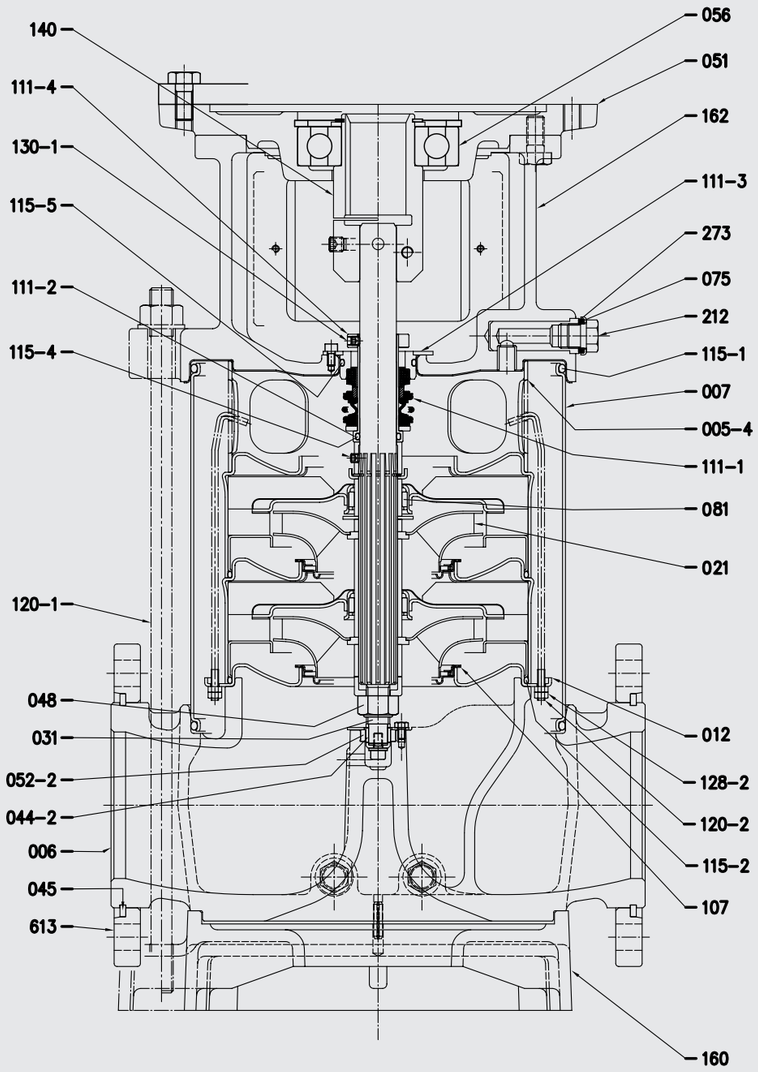

EVM 45-64 Pump with double ball bearing

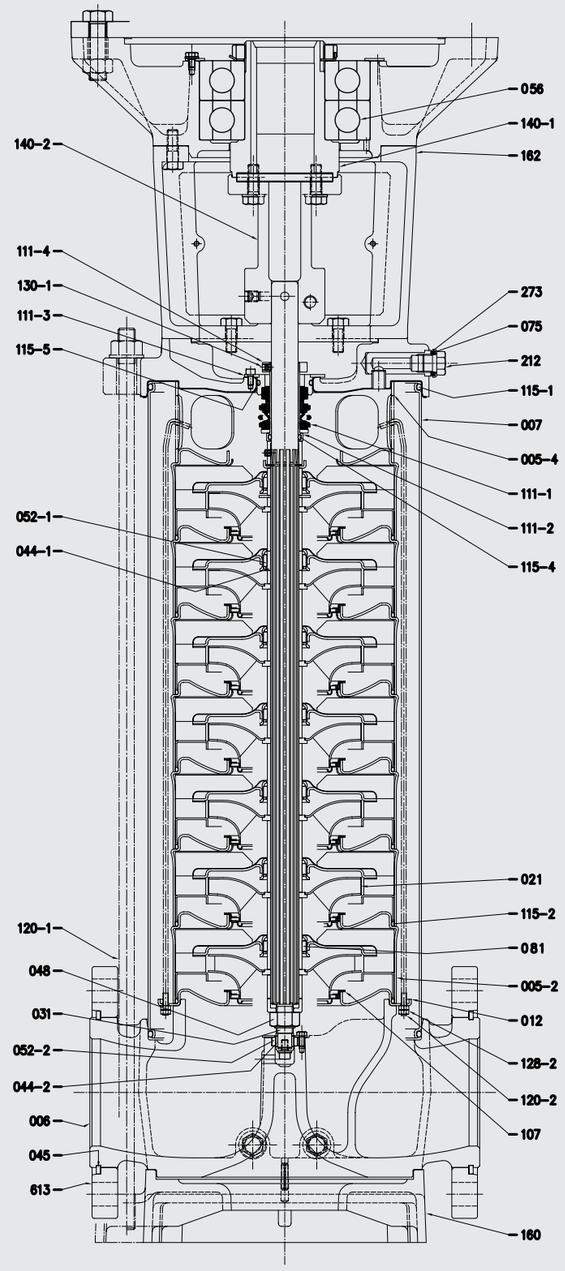

EVM 45-64

N°	Part name	Material		
		EVMG	EVM	EVML
005-4	Discharge casing	EN 1.4301 (AISI 304)		EN 1.4401 (AISI 316)
006	Bottom casing	Cast iron EN GJL-250- EN 1561	EN 1.4301 (AISI 304)	EN 1.4401 (AISI 316)
007	Outer casing	EN 1.4301 (AISI 304)		EN 1.4401 (AISI 316)
012	Suction cover	EN 1.4301 (AISI 304)		EN 1.4401 (AISI 316)
021	Impeller	EN 1.4301 (AISI 304)		EN 1.4401 (AISI 316)
031	Shaft	EN 1.4401 (AISI 316)		
044-1	Shaft sleeve bearing	Tungsten carbide		
044-2	Bearing sleeve	Tungsten carbide		
045	Flange holder	EN 1.402 (AISI 420)		
048	Impeller nut	A2-70 UNI 7323 with inox insert		A4-70 UNI 7323 with inox insert
051	Motor adapter	Cast iron EN-GJL-200-EN 1561		
052-2	Bearing	Tungsten carbide		
056	Ball bearing	-		
075	O-Ring (plug)	EPDM		FPM
081	Bush	PTFE		
107	Liner ring	PTFE / EN 1.4401 (AISI 316)		
111-1	Mechanical seal	Silicon carbide / Carbon /FPM		
111-2	Mechanical seal cartridge	EN 1.4301 (AISI 304)		EN 1.4401 (AISI 316)
111-3	Mechanical seal seat	EN 1.4301 (AISI 304)		EN 1.4401 (AISI 316)
111-4	Seal holder	Brass OT 58 UNI 5705		EN 1.4401 (AISI 316)
115-1	O-Ring (outer casing)	EPDM		FPM
115-2	O-Ring (intermediate casing)	EPDM		FPM
115-4	O-Ring (cartridge sleeve)	EPDM		FPM
115-5	O-Ring (seal cover)	EPDM		FPM
120-1	Tie-rod	Zincate steel 6.8 Strenght class ISO 898/1		
120-2	Tie-rod	EN 1.4301 (AISI 304)		EN 1.4401 (AISI 316)
128-2	Nut	Carbon steel		EN 1.4401 (AISI 316)
130-1	Set screw	A2-70 UNI 7323		
140	Coupling	Brass OT 58 UNI 5705		
140-1	Motor coupling	Carbon steel		
140-2	Coupling (pump side)	Carbon steel		
160	Base	-	Cast iron EN-GJL-200 EN 1561	
162	Motor bracket	Cast iron EN-GJL-200-EN 1561		
212	Plug	EN 1.4301 (AISI 304)		EN 1.4401 (AISI 316)
273	Plug washer	EN 1.4301 (AISI 304)		EN 1.4401 (AISI 316)
613	Flange	-	-	Carbon steel

EVM 3-18

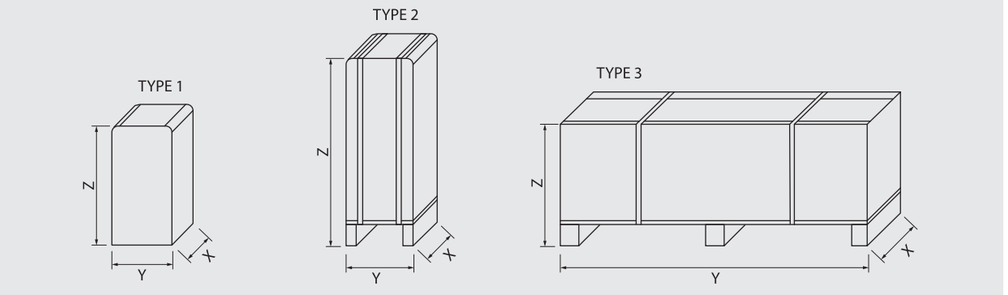

PUMP TYPE	PUMPS					PUMPS WITH MOTOR ~1					PUMPS WITH MOTOR ~3				
	PACKING [mm]			WEIGHT [kg]	PACK TYPE	PACKING [mm]			WEIGHT [kg]	PACK TYPE	PACKING [mm]			WEIGHT [kg]	PACK TYPE
	X	Y	Z			X	Y	Z			X	Y	Z		
EVM 3 2N5/0.37	265	265	410	12.3	1	265	265	525	18.2	1	265	265	525	18.2	1
EVM 3 3N5/0.37	265	265	410	12.8	1	265	265	525	18.7	1	265	265	525	18.7	1
EVM 3 4N5/0.55	265	265	410	13.3	1	265	265	525	20.5	1	265	265	525	19.8	1
EVM 3 5N5/0.55	265	265	410	13.8	1	300	300	825	23.8	2	300	300	825	23.1	2
EVM 3 6N5/0.75	265	265	410	14.7	1	300	300	825	29.1	2	300	300	825	26.1	2
EVM 3 7N5/0.75	265	265	410	14.9	1	300	300	825	29.3	2	300	300	825	26.3	2
EVM 3 9N5/1.1	265	265	525	16.0	1	300	300	825	30.6	2	300	300	825	28.3	2
EVM 3 11N5/1.1	265	265	525	17.4	1	300	300	825	32.0	2	300	300	825	29.7	2
EVM 3 13N5/1.5	265	265	525	18.9	1	300	300	935	38.7	2	300	300	935	34.6	2
EVM 3 15N5/1.5	300	300	825	23.2	2	400	400	1047	42.8	2	300	300	935	36.1	2
EVM 3 18F5/2.2	300	300	825	28.8	2	480	480	1147	52.3	2	400	400	1047	47.6	2
EVM 3 22F5/2.2	300	300	935	31.4	2	480	480	1297	55.1	2	480	480	1147	52.9	2
EVM 3 26F5/3.0	400	400	1047	37.6	2	-	-	-	-	-	480	480	1297	60.2	2
EVM 5 2N5/0.37	265	265	410	12.5	1	265	265	525	18.4	1	265	265	525	18.4	1
EVM 5 3N5/0.55	265	265	410	13.0	1	265	265	525	20.2	1	265	265	525	19.5	1
EVM 5 4N5/0.75	265	265	410	13.9	1	300	300	825	28.3	2	300	300	825	25.3	2
EVM 5 5N5/1.1	265	265	410	14.5	1	300	300	825	29.3	2	300	300	825	27.0	2
EVM 5 6N5/1.1	265	265	410	15.1	1	300	300	825	29.9	2	300	300	825	27.6	2
EVM 5 7N5/1.5	265	265	525	16.1	1	300	300	825	35.7	2	300	300	825	31.6	2
EVM 5 8N5/1.5	265	265	525	16.7	1	300	300	935	36.5	2	300	300	935	32.4	2
EVM 5 10N5/2.2	300	300	825	21.9	2	300	300	935	39.9	2	300	300	935	38.1	2
EVM 5 11N5/2.2	300	300	825	23.0	2	400	400	1047	43.6	2	300	300	935	39.2	2
EVM 5 12N5/2.2	300	300	825	23.7	2	400	400	1047	44.3	2	400	400	1047	42.5	2
EVM 5 14N5/3.0	300	300	825	26.0	2	-	-	-	-	-	480	480	1147	51.0	2
EVM 5 16N5/3.0	300	300	825	27.3	2	-	-	-	-	-	480	480	1147	52.3	2
EVM 5 18F5/4.0	300	300	935	32.9	2	-	-	-	-	-	480	480	1297	66.2	2
EVM 5 19F5/4.0	300	300	935	33.6	2	-	-	-	-	-	480	480	1297	66.9	2
EVM 5 22F5/4.0	400	400	1047	38.0	2	-	-	-	-	-	410	1350	542	72.4	3
EVM 5 24F5/5.5	480	480	1147	45.1	2	-	-	-	-	-	520	1540	547	91.1	3
EVM 10 2N5/0.75	300	300	825	22.0	2	300	300	825	33.4	2	300	300	825	30.4	2
EVM 10 3N5/1.1	300	300	825	23.5	2	300	300	825	35.3	2	300	300	825	33.0	2
EVM 10 4N5/1.5	300	300	825	25.9	2	300	300	825	42.7	2	300	300	825	38.6	2
EVM 10 5N5/2.2	300	300	825	26.5	2	300	300	935	44.5	2	300	300	935	42.7	2
EVM 10 6N5/2.2	300	300	825	28.0	2	300	300	935	46.0	2	300	300	935	44.2	2
EVM 10 8N5/3.0	300	300	825	34.6	2	-	-	-	-	-	400	400	1047	56.7	2
EVM 10 10N5/4.0	300	300	825	35.5	2	-	-	-	-	-	480	480	1147	68.6	2
EVM 10 11N5/4.0	300	300	825	38.0	2	-	-	-	-	-	480	480	1147	71.1	2
EVM 10 12N5/5.5	400	400	1047	46.0	2	-	-	-	-	-	480	480	1297	89.3	2
EVM 10 14N5/5.5	400	400	1047	48.5	2	-	-	-	-	-	480	480	1297	91.8	2
EVM 10 15F5/5.5	400	400	1047	52.5	2	-	-	-	-	-	410	1350	542	99.6	3
EVM 10 16F5/7.5	400	400	1047	54.5	2	-	-	-	-	-	410	1350	542	106.6	3
EVM 10 18F5/7.5	400	400	1047	56.5	2	-	-	-	-	-	410	1350	542	108.6	3
EVM 10 20F5/7.5	480	480	1147	59.5	2	-	-	-	-	-	410	1350	542	108.6	3
EVM 10 22F5/11	480	480	1297	65.6	2	-	-	-	-	-	610	1750	597	157.6	3
EVM 18 2F5/2.2	400	400	780	32.5	2	300	300	825	49.2	2	400	700	780	48.5	2
EVM 18 3F5/3.0	400	400	780	34.0	2	-	-	-	-	-	400	400	1047	54.9	2
EVM 18 4F5/4.0	400	400	780	36.5	2	-	-	-	-	-	400	400	1047	65.5	2
EVM 18 5F5/5.5	400	400	780	43.5	2	-	-	-	-	-	400	400	1047	85.1	2
EVM 18 6F5/5.5	400	400	780	46.5	2	-	-	-	-	-	480	480	1147	91.0	2
EVM 18 7F5/7.5	400	400	780	49.0	2	-	-	-	-	-	480	480	1147	98.5	2
EVM 18 8F5/7.5	400	400	1047	50.5	2	-	-	-	-	-	480	480	1297	98.8	2
EVM 18 10F5/11	400	400	1047	61.0	2	-	-	-	-	-	500	1350	552	149.9	3
EVM 18 12F5/11	400	400	1047	64.0	2	-	-	-	-	-	520	1540	547	154.0	3
EVM 18 14F5/15	480	480	1147	67.5	2	-	-	-	-	-	520	1540	547	166.5	3
EVM 18 15F5/15	480	480	1147	68.0	2	-	-	-	-	-	520	1540	547	167.0	3
EVM 18 16F5/15	480	480	1147	71.0	2	-	-	-	-	-	610	1750	597	175.4	3

EVM

VERTICAL MULTISTAGE CENTRIFUGAL PUMPS
IN CAST IRON - AISI 304 - AISI 316

PACKING AND WEIGHT

PUMP TYPE	PUMPS						PUMPS WITH MOTOR ~3					
	PACKING [mm]			WEIGHT [kg]	WEIGHT [kg]	PACK TYPE	PACKING [mm]			WEIGHT [kg]	WEIGHT [kg]	PACK TYPE
	X	Y	Z	EVM(G)	EVM(L)		X	Y	Z	EVM(G)	EVM(L)	
EVM(G) 32 1-0F5/2.2	400	400	780	56.13	61.13	2	400	400	1047	73.75	78.75	2
EVM(G) 32 2-2F5/3.0	400	400	780	57.63	63.13	2	400	400	1047	78.55	84.05	2
EVM(G) 32 2-0F5/4.0	400	400	780	57.63	63.13	2	400	400	1047	86.65	92.15	2
EVM(G) 32 3-3F5/5.5	400	400	780	72.13	79.13	2	480	480	1147	116.67	123.67	2
EVM(G) 32 3-0F5/5.5	400	400	780	72.13	79.13	2	480	480	1147	116.67	123.67	2
EVM(G) 32 4-3F5/7.5	400	400	780	75.13	82.13	2	480	480	1147	124.67	131.67	2
EVM(G) 32 4-0F5/7.5	400	400	780	75.13	82.13	2	480	480	1147	124.67	131.67	2
EVM(G) 32 5-3F5/11	400	400	1047	93.75	102.75	2	500	1540	540	182.2	191.2	3
EVM(G) 32 5-0F5/11	400	400	1047	93.75	102.75	2	500	1540	540	182.2	191.2	3
EVM(G) 32 6-3F5/11	400	400	1047	96.75	105.75	2	500	1540	540	185.2	194.2	3
EVM(G) 32 6-0F5/11	400	400	1047	96.75	105.75	2	500	1540	540	185.2	194.2	3
EVM(G) 32 7-3F5/15	400	400	1047	99.75	108.75	2	500	1540	540	200.2	209.2	3
EVM(G) 32 7-0F5/15	400	400	1047	99.75	108.75	2	500	1540	540	200.2	209.2	3
EVM(G) 32 8-3F5/15	480	480	1147	104.67	114.67	2	500	1540	540	202.2	212.2	3
EVM(G) 32 8-0F5/15	480	480	1147	104.67	114.67	2	460	1540	540	202.2	212.2	3
EVM(G) 32 9-3F5/18.5	480	480	1147	107.67	117.67	2	610	1750	593	219.7	229.7	3
EVM(G) 32 9-0F5/18.5	480	480	1147	107.67	117.67	2	610	1750	593	219.7	229.7	3
EVM(G) 32 10-3F5/18.5	480	480	1297	111.07	122.07	2	610	1750	593	222.7	233.7	3
EVM(G) 32 10-1F5/18.5	480	480	1297	111.07	122.07	2	610	1750	593	222.7	233.7	3
EVM(G) 32 11-3F5/22	480	480	1297	115.07	126.07	2	610	1750	593	255.7	266.7	3
EVM(G) 32 11-0F5/22	480	480	1297	115.07	126.07	2	610	1750	593	255.7	266.7	3
EVM(G) 32 12-3F5/22	400	1350	540	121.7	132.7	3	635	2130	587	319.7	330.7	3
EVM(G) 32 12-1F5/22	400	1350	540	121.7	132.7	3	635	2130	587	319.7	330.7	3
EVM(G) 32 13-3F5/30	500	1350	545	131.2	143.2	3	635	2130	587	370.7	382.7	3
EVM(G) 32 13-0F5/30	500	1350	545	131.2	143.2	3	635	2130	587	370.7	382.7	3
EVM(G) 32 14-3F5/30	500	1350	545	134.2	147.2	3	635	2130	587	373.7	386.7	3
EVM(G) 32 14-0F5/30	500	1350	545	134.2	147.2	3	635	2130	587	373.7	386.7	3
EVM(G) 45 1-1F5/3.0	400	400	780	69.13	76.13	2	400	400	1047	90.05	97.05	2
EVM(G) 45 1-0F5/4.0	400	400	780	71.13	78.1	2	400	400	1047	100.15	107.15	2
EVM(G) 45 2-2F5/5.5	400	400	780	79.13	86.13	2	480	480	1147	123.57	130.57	2
EVM(G) 45 2-0F5/7.5	400	400	780	79.13	86.13	2	480	480	1147	128.57	135.57	2
EVM(G) 45 3-2F5/11	400	400	1047	96.75	105.75	2	500	1540	540	185.2	194.2	3
EVM(G) 45 3-0F5/11	400	400	1047	96.75	105.75	2	500	1540	540	185.2	194.2	3
EVM(G) 45 4-2F5/15	400	400	1047	104.75	114.75	2	500	1540	540	193.2	203.2	3
EVM(G) 45 4-0F5/15	400	400	1047	104.75	114.75	2	500	1540	540	193.2	203.2	3
EVM(G) 45 5-2F5/18.5	480	480	1147	125.67	137.67	2	610	1750	593	237.7	249.7	3
EVM(G) 45 5-0F5/18.5	480	480	1147	125.67	137.67	2	610	1750	593	237.7	249.7	3
EVM(G) 45 6-2F5/22	480	480	1297	130.07	143.07	2	610	1750	593	270.7	283.7	3
EVM(G) 45 6-0F5/22	480	480	1297	130.07	143.07	2	610	1750	593	270.7	283.7	3
EVM(G) 45 7-2F5/30	480	480	1297	136.07	149.07	2	635	2130	587	379.7	392.7	3
EVM(G) 45 7-0F5/30	480	480	1297	136.07	149.07	2	635	2130	587	379.7	392.7	3
EVM(G) 45 8-2F5/30	500	1350	545	147.2	160.2	3	635	2130	587	386.7	399.7	3
EVM(G) 45 8-0F5/30	500	1350	545	147.2	160.2	3	635	2130	587	386.7	399.7	3
EVM(G) 45 9-2F5/30	500	1350	545	151.2	165.2	3	635	2130	587	390.7	404.7	3
EVM(G) 45 9-0F5/37	610	1750	593	157.7	171.7	3	635	2130	587	408.7	422.7	3
EVM(G) 45 10-2F5/37	610	1750	593	161.7	176.7	3	635	2130	587	412.7	427.7	3
EVM(G) 45 10-0F5/37	610	1750	593	161.7	176.7	3	635	2130	587	412.7	427.7	3
EVM(G) 64 1-1F5/4.0	400	400	780	69.13	75.53	2	400	400	1047	98.15	104.55	2
EVM(G) 64 1-0F5/5.5	400	400	780	75.13	82.13	2	480	480	1147	119.57	126.57	2
EVM(G) 64 2-2F5/7.5	400	400	780	79.13	86.53	2	480	480	1147	128.57	135.97	2
EVM(G) 64 2-1F5/11	400	400	1047	91.75	100.25	2	500	1350	545	180.2	188.7	3
EVM(G) 64 2-0F5/11	400	400	1047	91.75	100.25	2	500	1350	545	180.2	188.7	3
EVM(G) 64 3-3F5/15	400	400	1047	96.75	105.75	2	500	1540	540	198.2	207.2	3
EVM(G) 64 3-2F5/15	400	400	1047	96.75	105.75	2	500	1540	540	198.2	207.2	3
EVM(G) 64 3-1F5/15	400	400	1047	96.75	105.75	2	500	1540	540	198.2	207.2	3
EVM(G) 64 3-0F5/18.5	400	400	1047	96.75	105.75	2	500	1540	540	206.2	215.2	3
EVM(G) 64 4-3F5/18.5	400	400	1047	104.75	114.75	2	500	1540	540	214.2	224.2	3
EVM(G) 64 4-2F5/18.5	400	400	1047	104.75	114.75	2	500	1540	540	214.2	224.2	3
EVM(G) 64 4-1F5/22	400	400	1047	111.75	122.75	2	610	1750	593	255.7	266.7	3
EVM(G) 64 4-0F5/22	400	400	1047	111.75	122.75	2	610	1750	593	255.7	266.7	3
EVM(G) 64 5-3F5/30	480	480	1147	125.67	137.67	2	610	1750	593	308.7	320.7	3
EVM(G) 64 5-2F5/30	480	480	1147	125.67	137.67	2	610	1750	593	308.7	320.7	3
EVM(G) 64 5-1F5/30	480	480	1147	125.67	137.67	2	610	1750	593	308.7	320.7	3
EVM(G) 64 5-0F5/30	480	480	1147	125.67	137.67	2	610	1750	593	308.7	320.7	3
EVM(G) 64 6-3F5/30	480	480	1297	134.07	146.07	2	635	2130	587	377.7	389.7	3
EVM(G) 64 6-2F5/30	480	480	1297	134.07	146.07	2	635	2130	587	377.7	389.7	3
EVM(G) 64 6-1F5/37	480	480	1297	134.07	146.07	2	635	2130	587	395.7	407.7	3
EVM(G) 64 6-0F5/37	480	480	1297	134.07	146.07	2	635	2130	587	395.7	407.7	3
EVM(G) 64 7-3F5/37	480	480	1297	136.07	149.07	2	635	2130	587	397.7	410.7	3
EVM(G) 64 7-2F5/37	480	480	1297	136.07	149.07	2	635	2130	587	397.7	410.7	3
EVM(G) 64 7-1F5/37	480	480	1297	136.07	149.07	2	635	2130	587	397.7	410.7	3